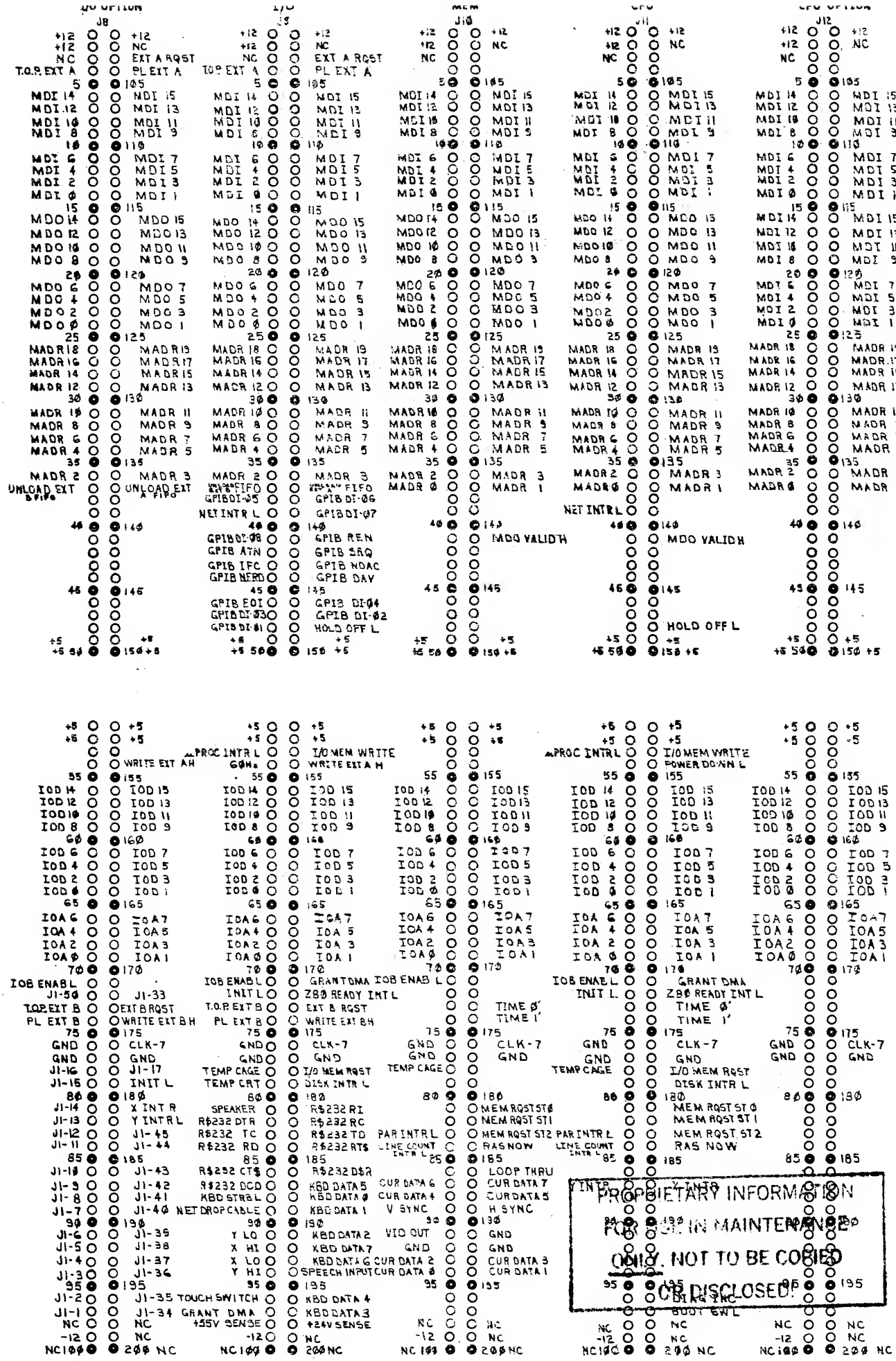

ALL PINS NUMBERED IN MULTIPLES OF 5 ARE GRN UNLESS NOTED (eg: 183 = GND)
PINS MARKED NC MUST NOT BE USED

PRQ-PCB-MOM-B PERQ MOTHER BOARD LAYOUT
WRAP PIN VIEW

Three Rivers Computer

PRQ-AD-0053-H PAGE 1 OF 2

6

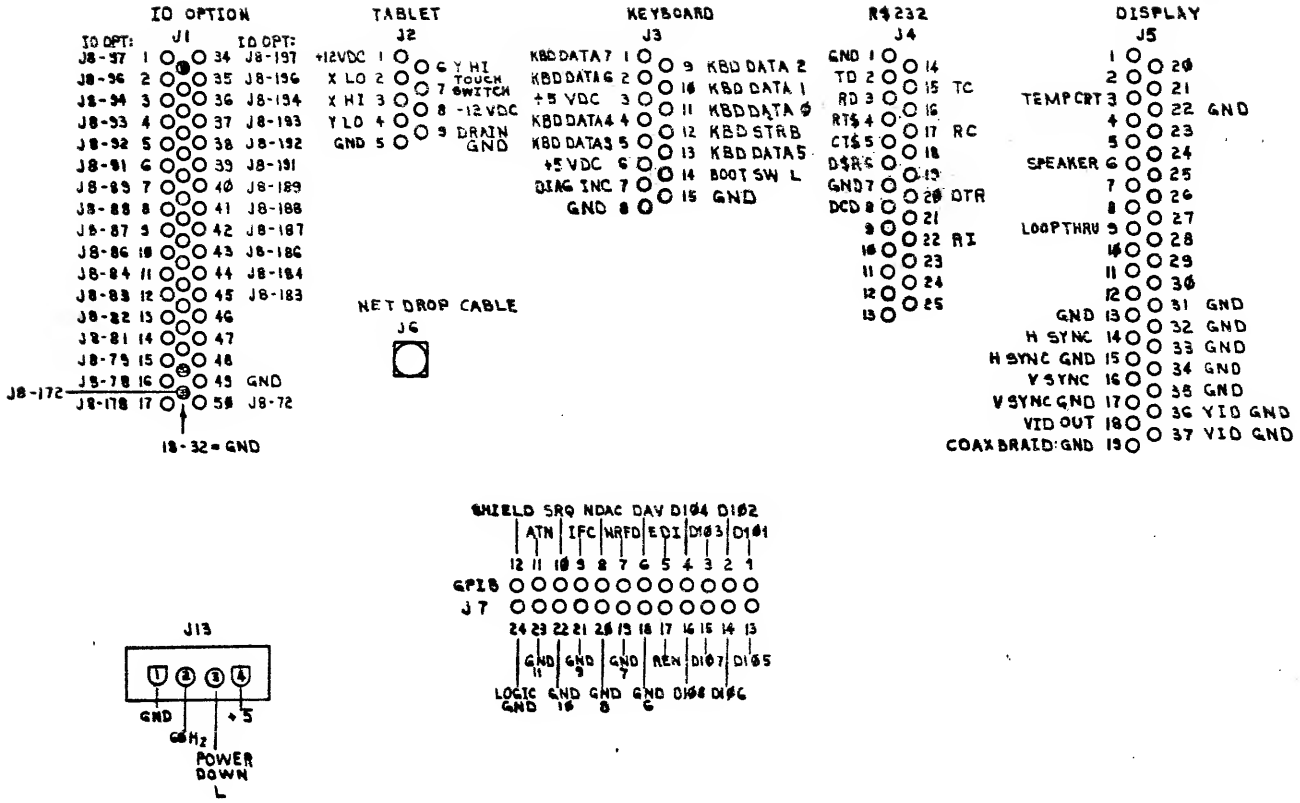

PROPRIETARY INFORMATION
FOR USE IN MAINTENANCE
ONLY. NOT TO BE COPIED
OR DISCLOSED!

Three Rivers Computer	
LOWER BACK PLANE CON	PERQ-MAM-B
T.T.	PRQ-AD-0054-H 2 of 2

	Initials	Date
Prepared By	DIV	
Approved By		

HALF MEG U NO. LIST

		PG.
U 1	74S374	4
U 2	MCM6665-20	20
U 3	SPARE	
U 4	MCM6665-20	
U 5	SPARE	
U 6	MCM6665-20	
U 7	SPARE	
U 8	MCM6665-20	
U 9	SPARE	20
U 10	74S241	4
U 11	74S241	4
U 12	74S280	3
U 13	MCM6665-20	20
U 14	SPARE	
U 15	MCM6665-20	
U 16	SPARE	
U 17	MCM6665-20	
U 18	SPARE	
U 19	MCM6665-20	
U 20	SPARE	20
U 21	74LS166	10
U 22	74S374	8
U 23	74S280	3
U 24	74S374	4
U 25	MCM6665-20	20
U 26	SPARE	
U 27	MCM6665-20	
U 28	SPARE	
U 29	MCM6665-20	
U 30	SPARE	
U 31	MCM6665-20	
U 32	SPARE	
U 33	MCM6665-20	
U 34	SPARE	
U 35	MCM6665-20	
U 36	SPARE	
U 37	MCM6665-20	
U 38	SPARE	
U 39	MCM6665-20	
U 40	SPARE	

	Initials	Date
Prepared By	DIV	
Approved By		

				Pg.
1	U	41	74LS166	10
2	U	42	74S374	8
3	U	43	74S51	3,6
4	U	44	74S374	5
5	U	45	MCM6665-20	20
6	U	46	SPARE	
7	U	47	MCM6665-20	
8	U	48	SPARE	
9	U	49	MCM6665-20	
10	U	50	SPARE	
11	U	51	MCM6665-20	
12	U	52	SPARE	20
13	U	53	74S374	7
14	U	54	SPARE	—
15	U	55	MCM6665-20	20
16	U	56	SPARE	
17	U	57	MCM6665-20	
18	U	58	SPARE	
19	U	59	MCM6665-20	
20	U	60	SPARE	
21	U	61	MCM6665-20	
22	U	62	SPARE	20
23	U	63	74LS166	9
24	U	64	74S374	7
25	U	65	74S374	5
26	U	66	MCM6665-20	20
27	U	67	SPARE	
28	U	68	MCM6665-20	
29	U	69	SPARE	
30	U	70	MCM6665-20	
31	U	71	SPARE	
32	U	72	MCM6665-20	
33	U	73	SPARE	
34	U	74	MCM6665-20	
35	U	75	SPARE	
36	U	76	MCM6665-20	
37	U	77	SPARE	
38	U	78	MCM6665-20	
39	U	79	SPARE	
40	U	80	MCM6665-20	20

	Initials	Date
Prepared By	DW	
Approved By		

				Pg.
1	U	81	SPARE	20
2	U	82	74LS166	9
3	U	83	74S280	6
4	U	84	74S74	23
5	U	85	74S374	4
6	U	86	MCM6665-20	20
7	U	87	SPARE	↑
8	U	88	MCM6665-20	↕
9	U	89	SPARE	↕
10	U	90	MCM6665-20	↕
11	U	91	SPARE	↕
12	U	92	MCM6665-20	↓
13	U	93	SPARE	20
14	U	94	74LS166	10
15	U	95	74S374	8
16	U	96	MCM6665-20	20
17	U	97	SPARE	↑
18	U	98	MCM6665-20	↕
19	U	99	SPARE	↕
20	U	100	MCM6665-20	↕
21	U	101	SPARE	↕
22	U	102	MCM6665-20	↓
23	U	103	SPARE	20
24	U	104	74S374	4
25	U	105	MCM6665-20	20
26	U	106	SPARE	↑
27	U	107	MCM6665-20	↕
28	U	108	SPARE	↕
29	U	109	MCM6665-20	↕
30	U	110	SPARE	↕
31	U	111	MCM6665-20	↓
32	U	112	SPARE	20
33	U	113	74LS166	10
34	U	114	74S374	8
35	U	115	74S374	14
36	U	116	74S374	14
37	U	117	MCM6665-20	20
38	U	118	SPARE	↑
39	U	119	MCM6665-20	↓
40	U	120	SPARE	20

Prepared By	Initials	Date
Approved By	DIV	

				PG.
1	U	121	MCM6665-20	20
2	U	122	SPARE	
3	U	123	MCM6665-20	
4	U	124	SPARE	20
5	U	125	74S374	7
6	U	126	74S374	5
7	U	127	MCM6665-20	20
8	U	128	SPARE	
9	U	129	MCM6665-20	
10	U	130	SPARE	
11	U	131	MCM6665-20	
12	U	132	SPARE	
13	U	133	MCM6665-20	
14	U	134	SPARE	20
15	U	135	74LS166	9
16	U	136	MCM6665-20	20
17	U	137	SPARE	
18	U	138	MCM6665-20	
19	U	139	SPARE	
20	U	140	MCM6665-20	
21	U	141	SPARE	
22	U	142	MCM6665-20	
23	U	143	SPARE	20
24	U	144	74S374	7
25	U	145	74LS374	23
26	U	146	74S174	14
27	U	147	74S374	5
28	U	148	MCM6665-20	20
29	U	149	SPARE	
30	U	150	MCM6665-20	
31	U	151	SPARE	
32	U	152	MCM6665-20	
33	U	153	SPARE	
34	U	154	MCM6665-20	
35	U	155	SPARE	20
36	U	156	74LS166	9
37	U	157	74S280	6
38	U	158	74S74	3
39	U	159	MCM6665-20	20
40	U	160	SPARE	20

Initials	Date
Prepared By	DIV	
Approved By		

				PG.
1	U	161	MCM6665-20	20
2	U	162	SPARE	↑
3	U	163	MCM6665-20	↓
4	U	164	SPARE	
5	U	165	MCM6665-20	20
6	U	166	SPARE	6
7	U	167	74S175	6
8	U	168	74S153	3
9	U	169	74S74	20
10	U	170	MCM6665-20	↑
11	U	171	SPARE	
12	U	172	MCM6665-20	
13	U	173	SPARE	
14	U	174	MCM6665-20	
15	U	175	SPARE	↓
16	U	176	MCM6665-20	20
17	U	177	SPARE	6,26
18	U	178	74S139	—
19	U	179	SPARE	23
20	U	180	74LS374	3
21	U	181	74S08	—
22	U	182	SPARE	16
23	U	183	74S04	16
24	U	184	74S04	—
25	U	185	SPARE	—
26	U	186	SPARE	17
27	U	187	74S04	17
28	U	188	74S04	—
29	U	189	SPARE	—
30	U	190	SPARE	18
31	U	191	74S04	18
32	U	192	74S04	—
33	U	193	SPARE	—
34	U	194	SPARE	19
35	U	195	74S04	19
36	U	196	74S04	—
37	U	197	SPARE	—
38	U	198	SPARE	15
39	U	199	74S258	15
40	U	200	74S258	
41				

Initials	Date
Prepared By	DIV	
Approved By		

			PG.
1	U 201	74S258	28
2	U 202	74S258	28
3	U 203	74S258	14
4	U 204	74S258	14
5	U 205	74S112	24
6	U 206	74S112	24
7	U 207	74S112	25
8	U 208	74S00	4,5
9	U 209	74LS374	27
10	U 210	74S00	14, 22, 26, 27
11	U 211	74S37	25
12	U 212	74LS163	22
13	U 213	74LS374	22
14	U 214	74LS374	15
15	U 215	74LS197	28
16	U 216	74LS197	28
17	U 217	74LS393	28
18	U 218	74S112	24
19	U 219	74S112	24
20	U 220	74S112	25
21	U 221	74S08	25, 27
22	U 222	HMI-7649-B5546	27
23	U 223	74S175	27
24	U 224	74S175	27
25	U 225	74LS163	22
26	U 226	74LS174	22
27	U 227	74LS393	15
28	U 228	74LS197	15
29	U 229	74LS197	28
30	U 230	SPARE	—
31	U 231	74S112	24
32	U 232	74S30	24
33	U 233	74S32	25, 27
34	U 234	HMI-7649-B5546	27
35	U 235	74S74	22, 23
36	U 236	74S10	23, 25
37	U 237	74LS374	22
38	U 238	74S197	22
39	U 239	74S197	22
40	U 240	74LS240	23
41			

	Initials	Date
Prepared By	DIV	
Approved By		

				PG
1	U	241	74S138	23
2	U	242	74S02	6, 15, 23
3	U	243	74S74	26
4	U	244	74S112	24
5	U	245	74S11	24, 25
6	U	246	74S112	25
7	U	247	K1100A	24
8	U	248	SPARE	—
9	U	249	74S195	12
10	U	250	74S112	12
11	U	251	74S00	12, 23, 25
12	U	252	74S112	12
13	U	253	74S20	12
14	U	254	74S74	26, 27
15	U	255	74S04	25, 26
16	U	256	74LS163	26
17	U	257	HMI-7649-B5546	26
18	U	258	74S374	26
19	U	259	74S32	11, 12
20	U	260	74S195	12
21	U	261	74S225	11
22	U	262	74S374	11
23	U	263	74S225	13
24	U	264	74S225	13
25	U	265	74S374	13
26	U	266	74S08	13
27	U	267	74S112	26
28	U	268	74LS163	26
29	U	269	HMI-7649-B5546	26
30	U	270	74S374	26
31	U	271	74S32	13, 25
32	U	272	74S225	11
33	U	273	74S374	11
34	U	274	HMI-7643-5	11
35	U	275	HMI-7643-5	11
36	U	276	HMI-7643-5	11
37	U	277	74S37	12, 25
38				
39				
40				

	Initials	Date
Prepared By	DIV	
Approved By		

			PG.
1	R 1	CB1025	4
2	R 2	CB1025	3
3	R 3	CB4705	9
4	R 4	CB1025	6
5	R 5	CB1025	14
6	R 6	784-3-R33	16
7	R 7	SPARE	—
8	R 8	784-3-R33	17
9	R 9	SPARE	—
10	R 10	784-3-R33	18
11	R 11	SPARE	—
12	R 12	784-3-R33	19
13	R 13	SPARE	—
14	R 14	784-3-R33	16
15	R 15	SPARE	—
16	R 16	784-3-R33	17
17	R 17	SPARE	—
18	R 18	784-3-R33	18
19	R 19	SPARE	—
20	R 20	784-3-R33	19
21	R 21	SPARE	—
22	R 22	784-3-R33	16
23	R 23	SPARE	—
24	R 24	784-3-R33	17
25	R 25	SPARE	—
26	R 26	784-3-R33	18
27	R 27	SPARE	—
28	R 28	784-3-R33	19
29	R 29	SPARE	—
30	R 30	CB1025	25
31	R 31	VAAIJI	23
32	R 32	CB1025	24
33	R 33	CB1025	22
34	R 34	CB1025	22
35	R 35	CB1025	28
36	R 36	CB1025	23
37	R 37	CB3305	24
38	R 38	CB1005	24
39	R 39	CB4G75	24
40	R 40	CB1025	26

	Initials	Date
Prepared By	DIV	
Approved By		

			PG
R 41	CB1025		12
R 42	CB3305		26
R 43	CB3305		26
R 44	CB1025		26
R 45	CB1025		12
R 46	CB2215		23
D 1	1N4004		24
D 2	1N4004		24
Q 1	2N3866		24
L 1	WEE-1.0 uH		24
L 2	6317-4		24
L 3	WEE-1.0 uH		24
		QTY	LOCATIONS
	514AG37D	1	U247
	516AG37D	8	U21, U41, U63, U82, U94, U113, U135, U156
	518AG37D	3	U274, U275, U276
	520AG37D	4	U222, U234, U257, U269
C 1	202A200225M1		
C 2	202A200225M1		
C 3	202A200225M1		
C 4	202A200225M1		
C 5	202A200225M1		
C 6	CY15C103M		
C 7	CY15C103M		
C 8	CY15C103M		
C 9	202A200225M1		
C 10	202A200225M1		
C 11	202A200225M1		
C 12	CY15C103M		
C 13	CY15C103M		
C 14	CY15C103M		
C 15	202A200225M1		
C 16	CY15C103M		
C 17	CY15C103M		
C 18	202A200225M1		

	Initials	Date
Prepared By	DIV	
Approved By		

C	19	CY15C103M
C	20	CY15C103M
C	21	CY15C103M
C	22	202A200225M1
C	23	CY15C103M
C	24	202A200225M1
C	25	202A200225M1
C	26	202A200225M1
C	27	202A200225M1
C	28	202A200225M1
C	29	202A200225M1
C	30	202A200225M1
C	31	CY15C103M
C	32	202A200225M1
C	33	CY15C103M
C	34	CY15C103M
C	35	CY15C103M
C	36	202A200225M1
C	37	202A200225M1
C	38	CY15C103M
C	39	CY15C103M
C	40	CY15C103M
C	41	202A200225M1
C	42	CY15C103M
C	43	202A200225M1
C	44	202A200225M1
C	45	CY15C103M
C	46	CY15C103M
C	47	CY15C103M
C	48	202A200225M1
C	49	CY15C103M
C	50	CY15C103M
C	51	202A200225M1
C	52	202A200225M1
C	53	202A200225M1
C	54	202A200225M1
C	55	202A200225M1
C	56	202A200225M1
C	57	202A200225M1
C	58	202A200225M1

Three Rivers Computer

Initials	Date
Prepared By: DIV	
Approved By:	

1	C 59	CY15C103M
2	C 60	CY15C103M
3	C 61	CY15C103M
4	C 62	202A200225MI
5	C 63	202A200225MI
6	C 64	CY15C103M
7	C 65	CY15C103M
8	C 66	CY15C103M
9	C 67	202A200225MI
10	C 68	CY15C103M
11	C 69	202A200225MI
12	C 70	202A200225MI
13	C 71	CY15C103M
14	C 72	CY15C103M
15	C 73	CY15C103M
16	C 74	202A200225MI
17	C 75	202A200225MI
18	C 76	CY15C103M
19	C 77	CY15C103M
20	C 78	202A200225MI
21	C 79	202A200225MI
22	C 80	202A200225MI
23	C 81	202A200225MI
24	C 82	202A200225MI
25	C 83	202A200225MI
26	C 84	202A200225MI
27	C 85	202A200225MI
28	C 86	CY15C103M
29	C 87	CY15C103M
30	C 88	CY15C103M
31	C 89	202A200225MI
32	C 90	CY15C103M
33	C 91	202A200225MI
34	C 92	CY15C103M
35	C 93	CY15C103M
36	C 94	CY15C103M
37	C 95	202A200225MI
38	C 96	CY15C103M
39	C 97	CY15C103M
40	C 98	202A200225MI

Three Rivers Computer

Prepared By	Initials	Date
Approved By	DIV	

			1	2
1	C 99	202A200225MI		
2	C 100	CY15C103M		
3	C 101	CY15C103M		
4	C 102	CY15C103M		
5	C 103	202A200225MI		
6	C 104	CY15C103M		
7	C 105	202A200225MI		
8	C 106	202A200225MI		
9	C 107	202A200225MI		
10	C 108	202A200225MI		
11	C 109	202A200225MI		
12	C 110	CY15C103M		
13	C 111	202A200225MI		
14	C 112	202A200225MI		
15	C 113	CY15C103M		
16	C 114	202A200225MI		
17	C 115	202A200225MI		
18	C 116	CY15C103M		
19	C 117	202A200225MI		
20	C 118	202A200225MI		
21	C 119	202A200225MI		
22	C 120	202A200225MI		
23	C 121	202A200225MI		
24	C 122	202A200225MI		
25	C 123	202A200225MI		
26	C 124	202A200225MI		
27	C 125	202A200225MI		
28	C 126	SPARE		
29	C 127	CY15C103M		
30	C 128	CY15C103M		
31	C 129	CY15C103M		
32	C 130	CY15C103M		
33	C 131	CY15C103M		
34	C 132	CY15C103M		
35	C 133	202A200225MI		
36	C 134	CY15C103M		
37	C 135	CY15C103M		
38	C 136	202A200225MI		
39	C 137	202A200225MI		
40	C 138	202A200225MI		

Initials	Date
Prepared By	DIV	
Approved By		

1	C 139	202A200225MI
2	C 140	CY15C103M
3	C 141	CY15C103M
4	C 142	202A200225MI
5	C 143	CY15C103M
6	C 144	202A200225MI
7	C 145	CY15C103M
8	C 146	CY15C103M
9	C 147	CY15C103M
10	C 148	CY15C103M
11	C 149	CY15C103M
12	C 150	CY15C103M
13	C 151	CY15C103M
14	C 152	CY15C103M
15	C 153	202A200225MI
16	C 154	CY15C103M
17	C 155	CY15C103M
18	C 156	202A200225MI
19	C 157	CY15C103M
20	C 158	202A200225MI
21	C 159	CY15C103M
22	C 160	202A200225MI
23	C 161	202A200225MI
24	C 162	CY15C103M
25	C 163	202A200225MI
26	C 164	CY15C103M
27	C 165	CY15C103M
28	C 166	DD101
29	C 167	DD102
30	C 168	DD181
31	C 169	CY15C103M
32	C 170	202A200225MI
33	C 171	CY15C103M
34	C 172	DD270
35	C 173	CY15C103M
36	C 174	202A200225MI
37	C 175	CY15C103M
38	C 176	202A200225MI
39	C 177	CY15C103M
40	C 178	202A200225MI

Prepared By	DIV	
Approved By		

C	179	CY15C103M
C	180	202A200225MI
C	181	CY15C103M
C	182	202A200225MI
C	183	CY15C103M
C	184	CY15C103M
C	185	202A200225MI
C	186	202A200225MI
C	187	202A200225MI
C	188	CY15C103M
C	189	202A200225MI

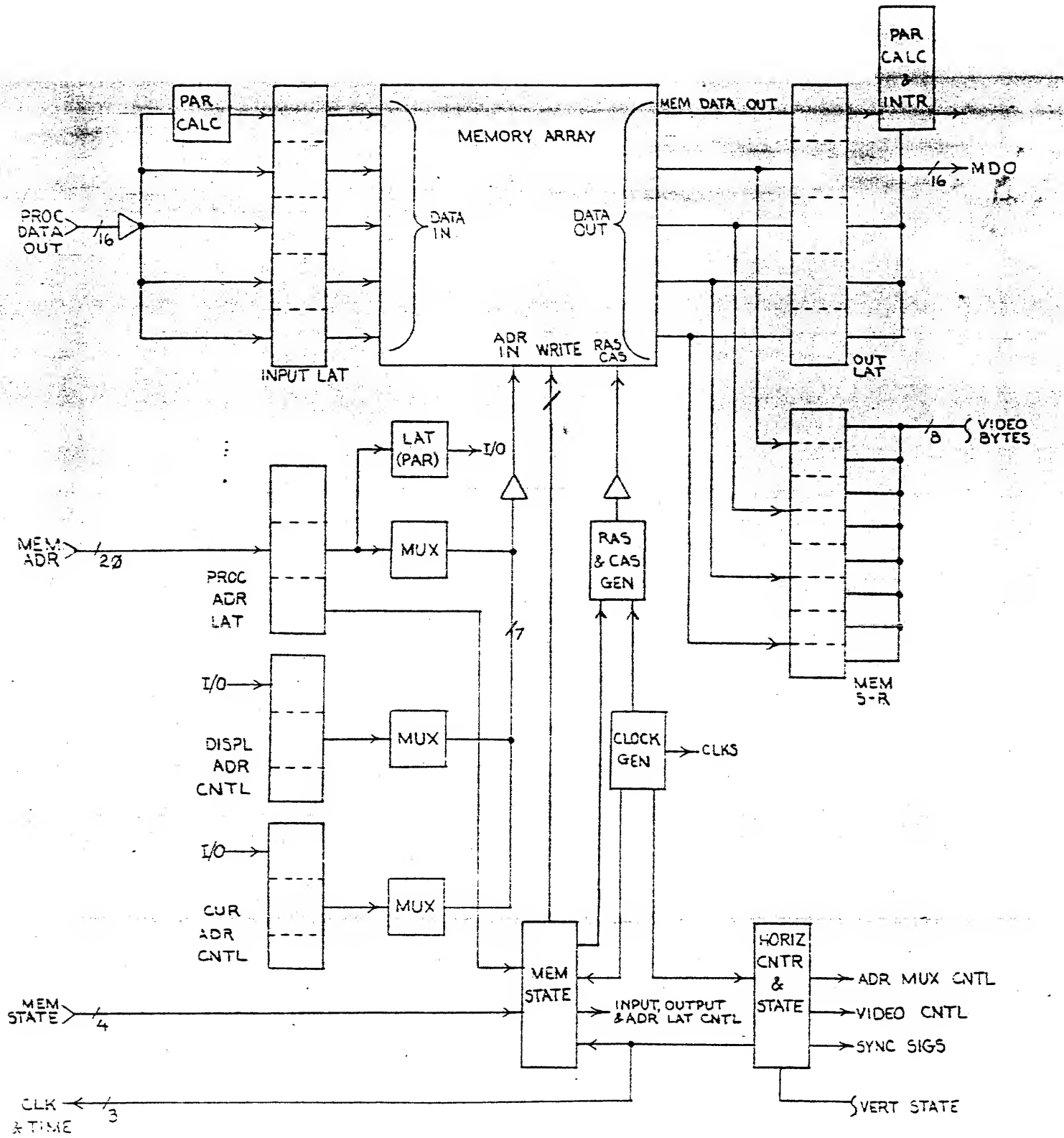

Three Rivers Computer

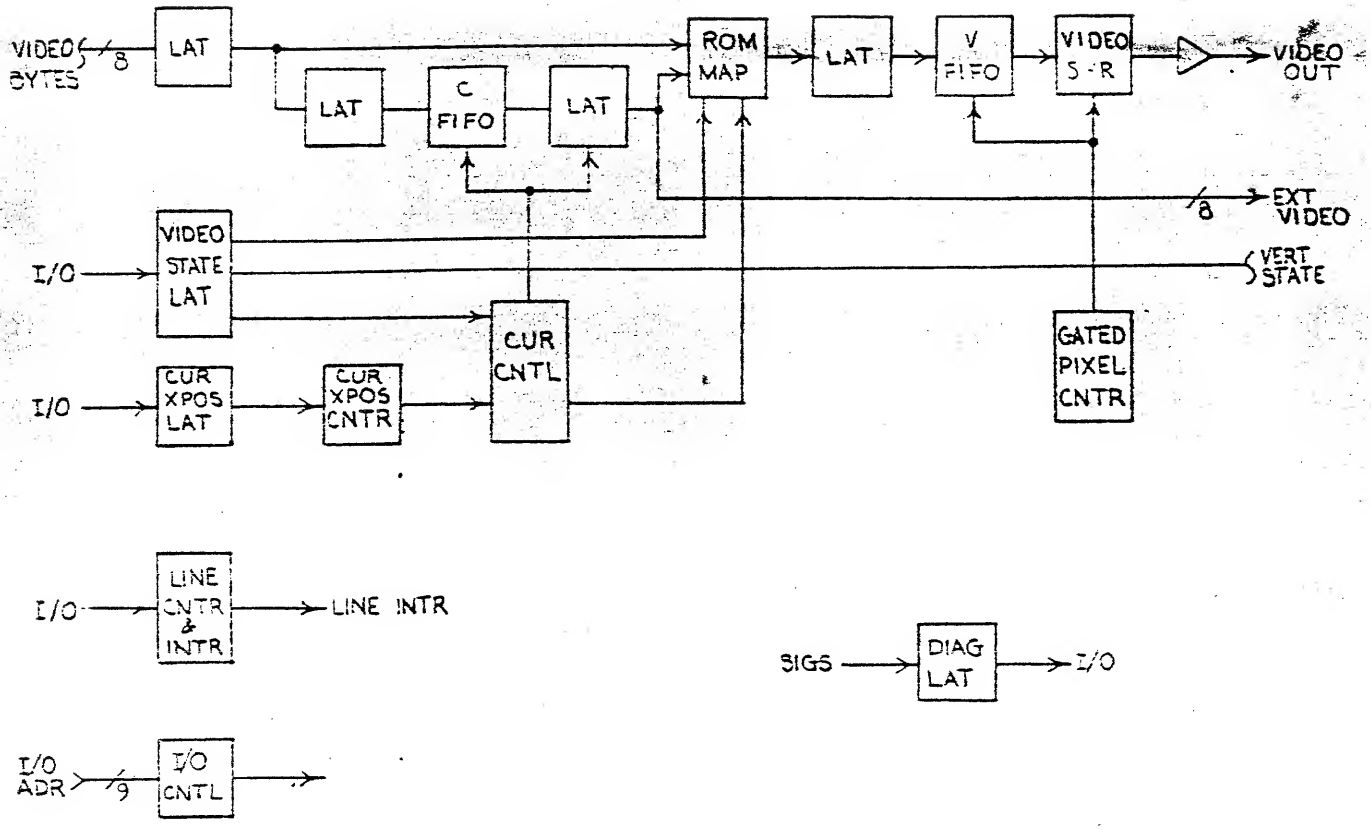

Three Rivers Computer

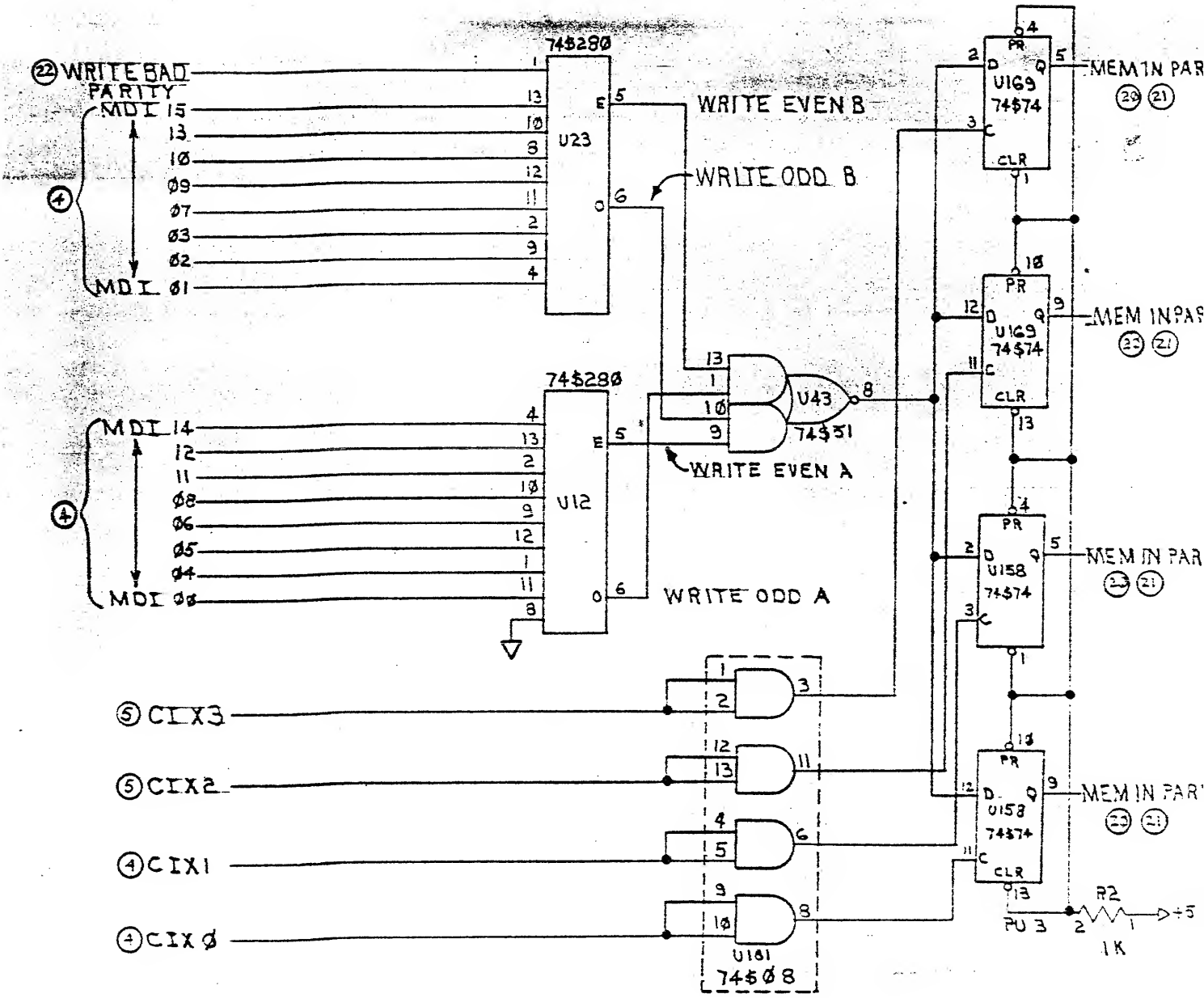

Three Rivers Computer	
DATA INPUT - PARITY	[illegible]
[illegible]	[illegible]

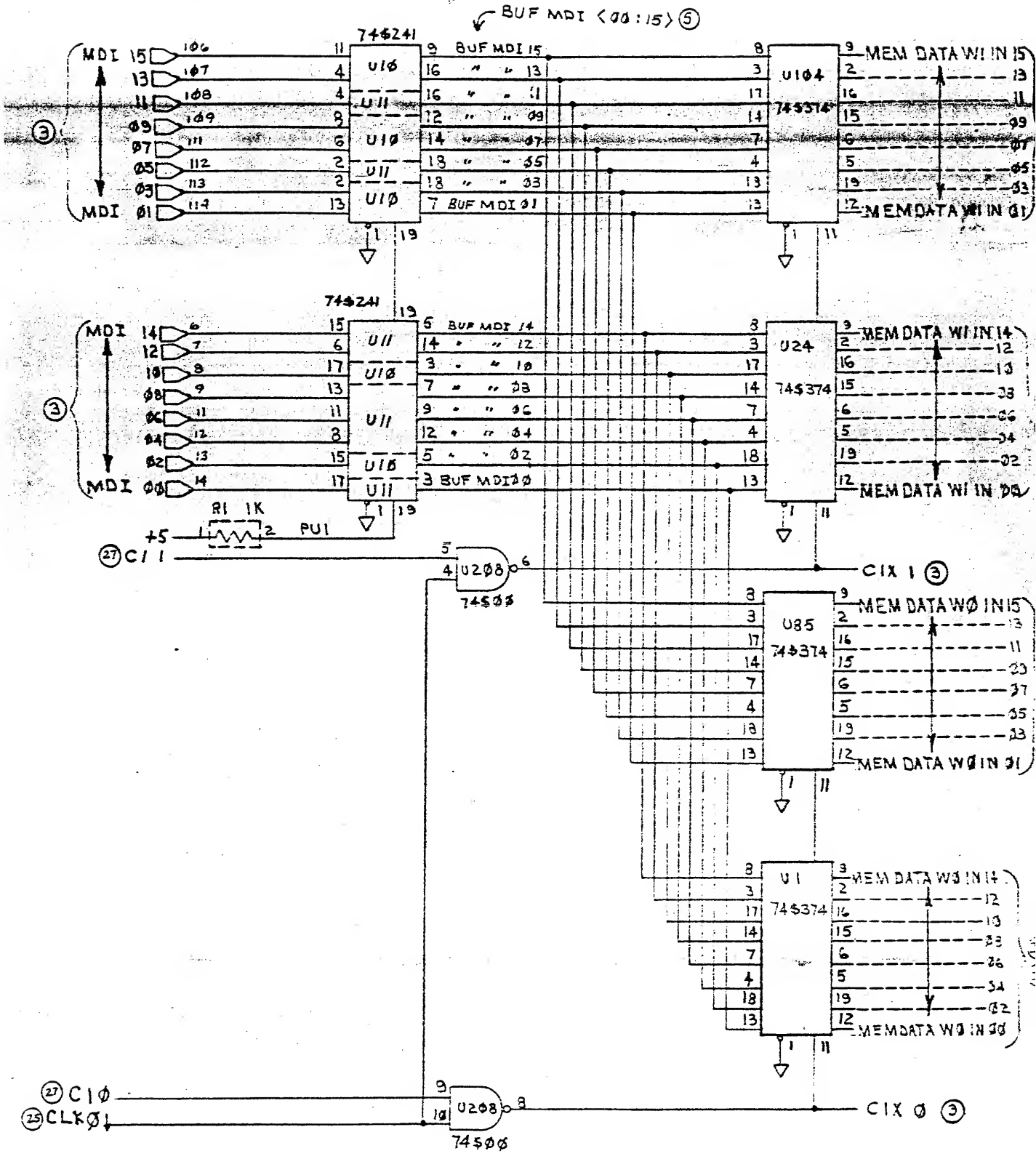

Three Rivers Computer	
DATA INPUT: W0 W1	[illegible]-001
[illegible]	[illegible]

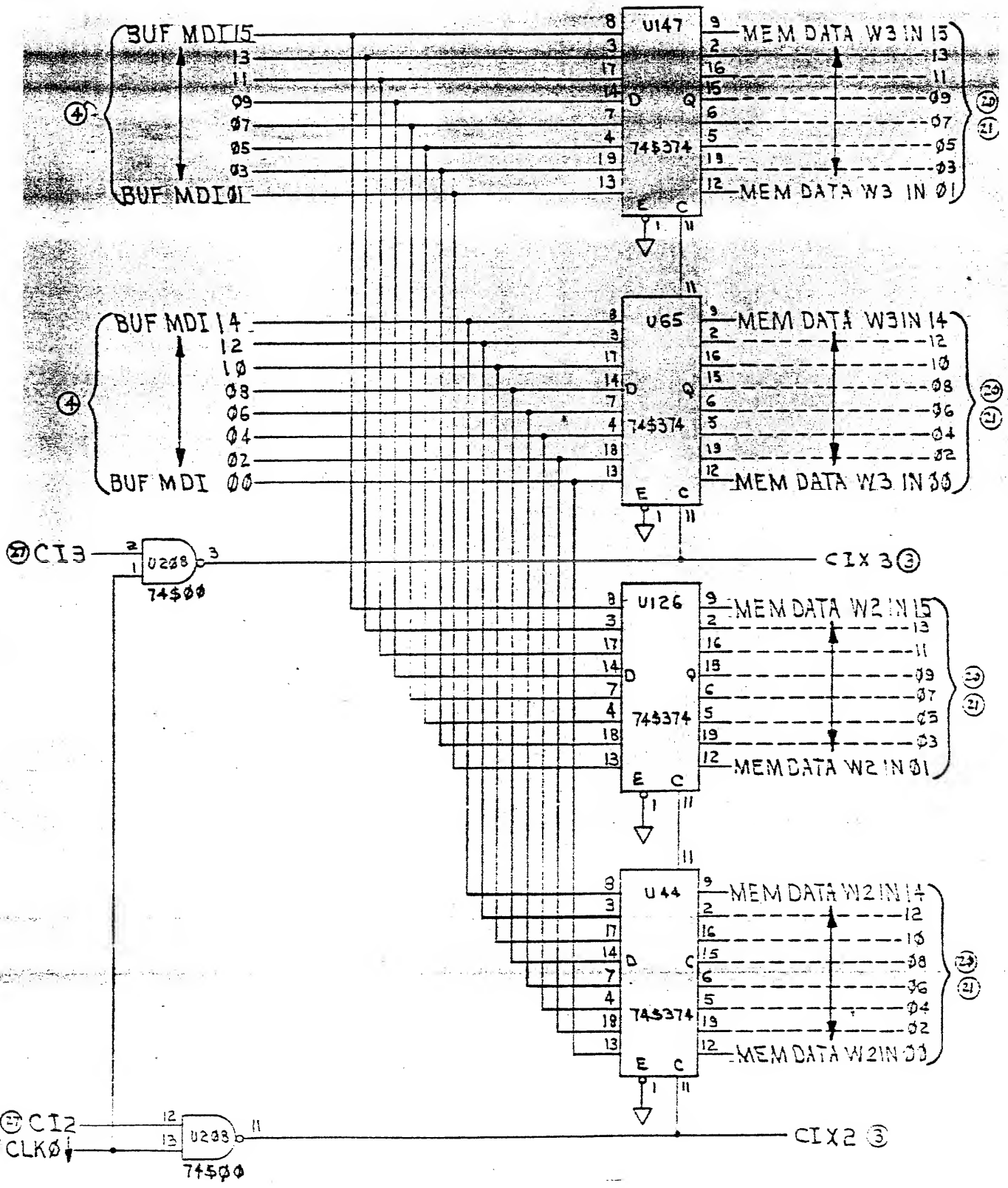
BUF MDI15
13
11
09
07
05
03
BUF MDI01
U147
74S374
MEM DATA W3 IN 15
MEM DATA W3 IN 01
BUF MDI14
12
10
08
06
04
02
BUF MDI 00
U65
MEM DATA W3IN 14
MEM DATA W3 IN 00
CI3
U208
74S00
CIX 3
U126
MEM DATA W2 IN 15
MEM DATA W2 IN 01
U44
MEM DATA W2 IN 14
MEM DATA W2 IN 00
CI2
CLK0
U208
74S00
CIX 2

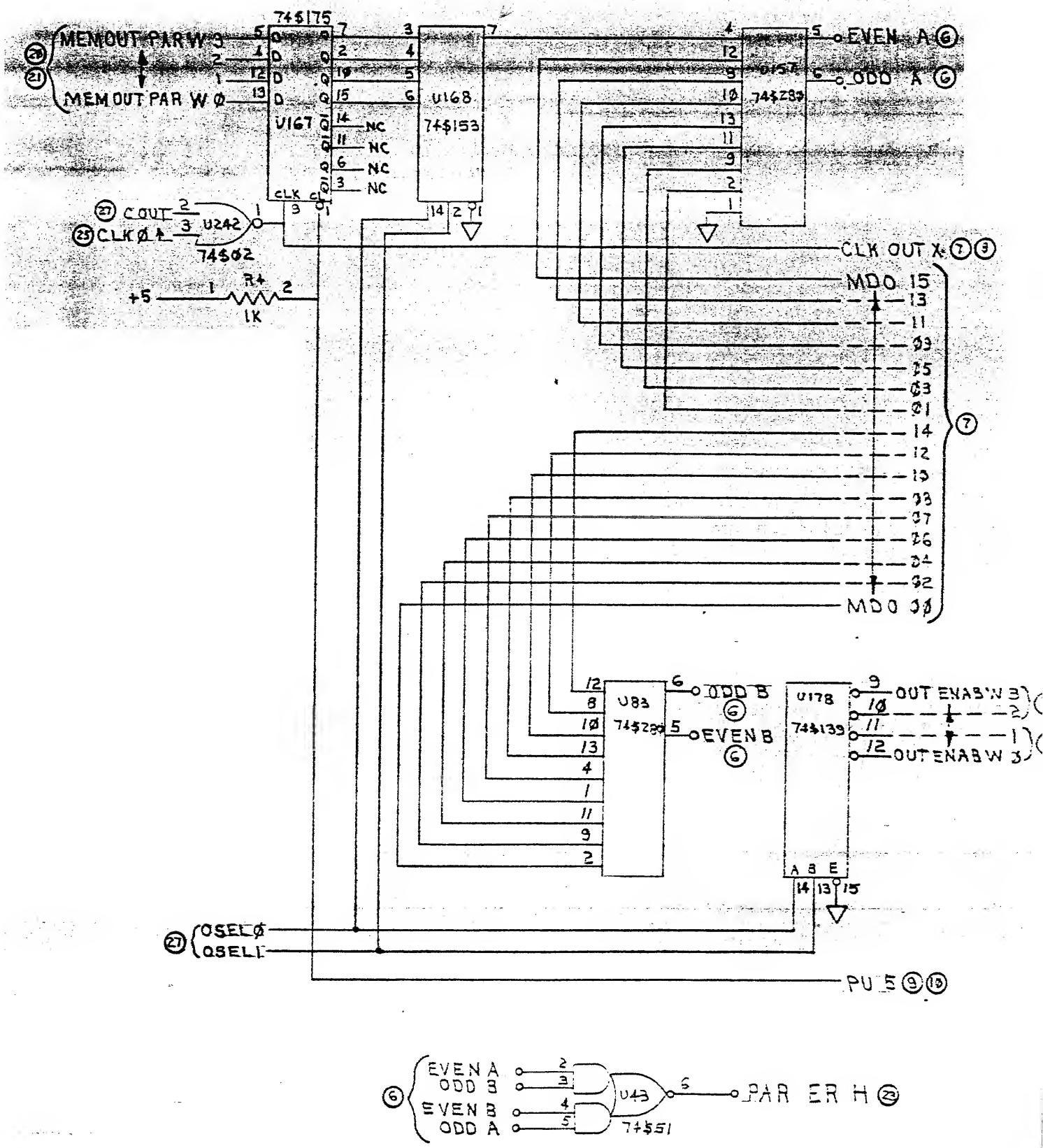
MEMOUT PAR W 3
MEMOUT PAR W Ø
74$175
U167
U168
74$153
NC
NC
NC
NC
CLK
CLK OUT X
COUT
CLKØ
U242
74$Ø2
+5
R4
1K
EVEN A
ODD A
74$257
74$289
MDO 15
13
11
Ø9
Ø5
Ø3
Ø1
14
12
1Ø
Ø8
Ø7
Ø6
Ø4
Ø2
MDO ØØ
U83
74$289
ODD B
EVEN B
U178
74$139
OUT ENAB W 3
OUT ENAB W 3
A B E
OSELØ
OSEL1
PU 5
EVEN A
ODD B
EVEN B
ODD A
U43
74$51
PAR ER H

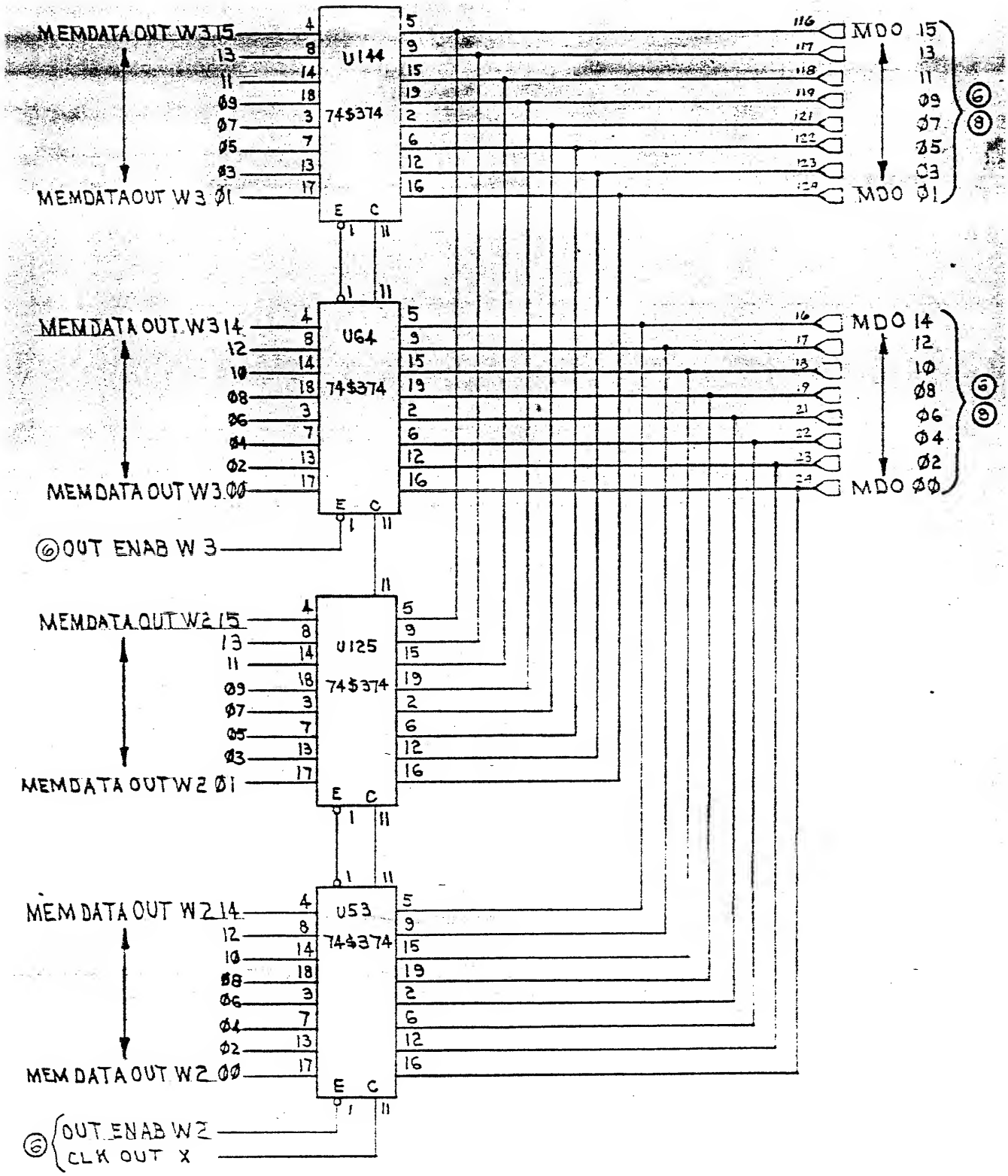

Three Rivers Computer

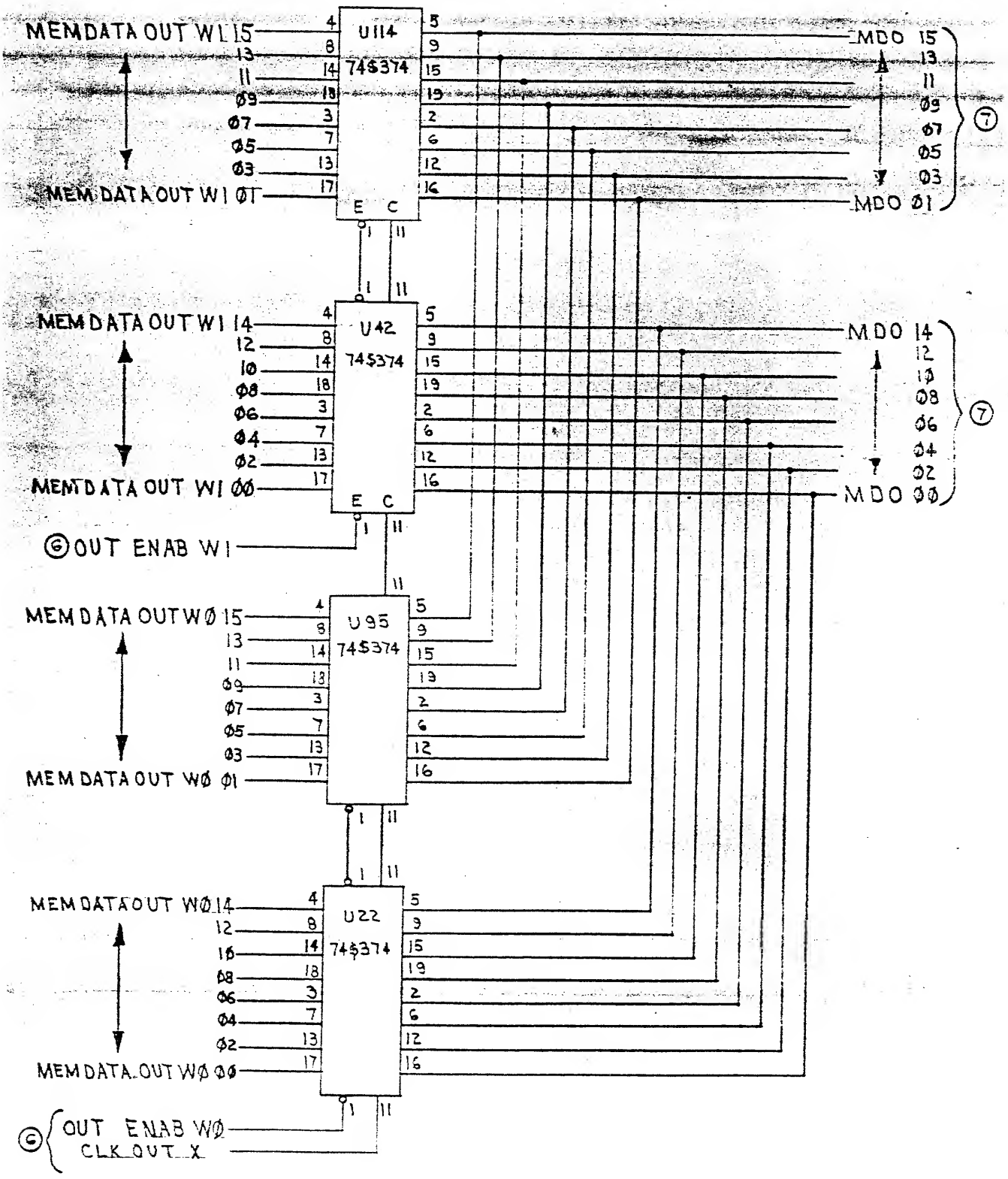

Three Rivers Computer

DATA OUTPUT

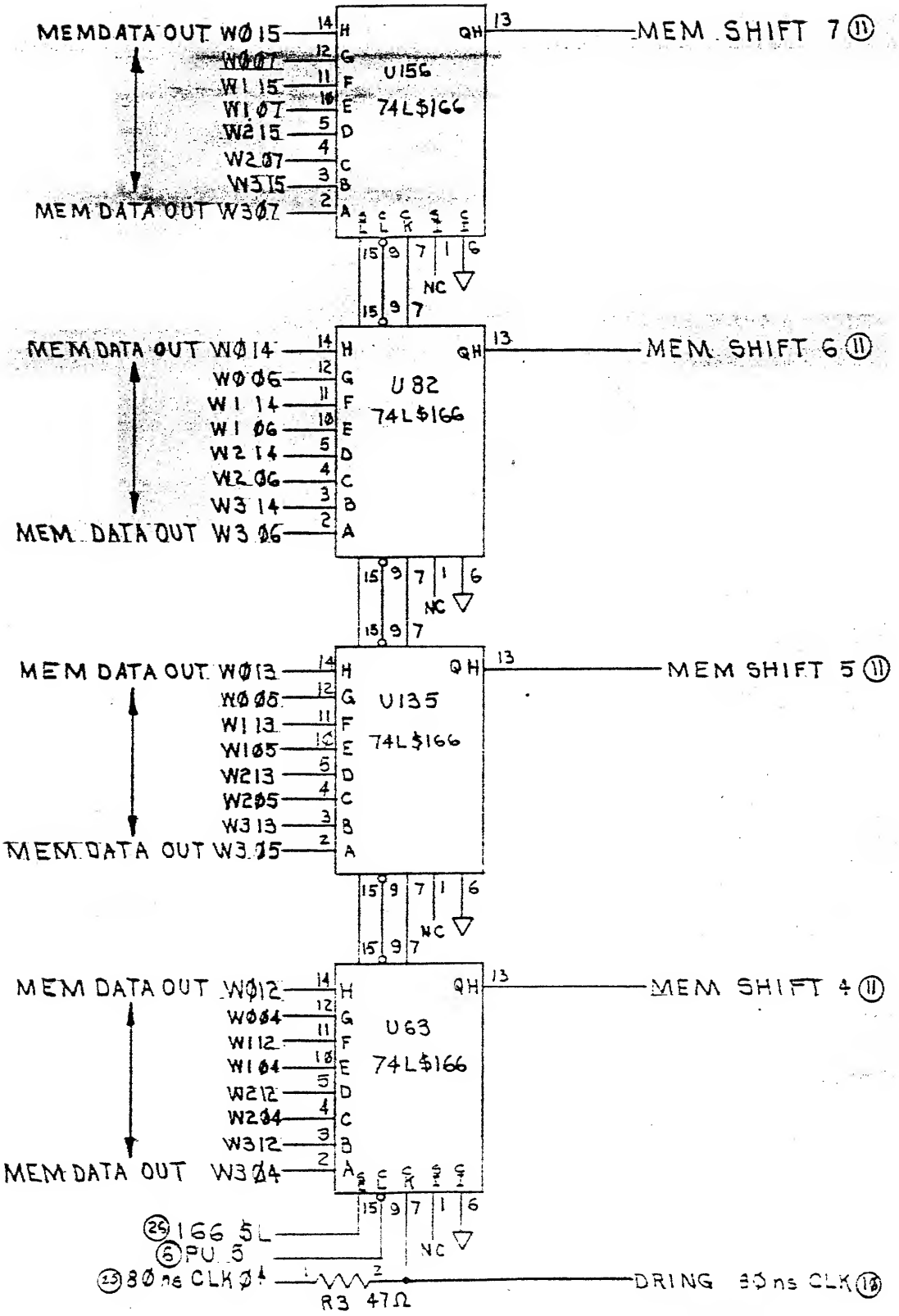
MEM DATA OUT W0 15
W0 07
W1 15
W1 07
W2 15
W2 07
W3 15
MEM DATA OUT W3 07
U156
74LS166
MEM SHIFT 7 (11)
MEM DATA OUT W0 14
W0 06
W1 14
W1 06
W2 14
W2 06
W3 14
MEM DATA OUT W3 06
U82
74LS166
MEM SHIFT 6 (11)
MEM DATA OUT W0 13
W0 05
W1 13
W1 05
W2 13
W2 05
W3 13
MEM DATA OUT W3 05
U135
74LS166
MEM SHIFT 5 (11)
MEM DATA OUT W0 12
W0 04
W1 12
W1 04
W2 12
W2 04
W3 12
MEM DATA OUT W3 04
U63
74LS166
MEM SHIFT 4 (11)
(25) 166 SL
(6) PU 5
(23) 80 ns CLK 04
R3 47Ω
DRING 80 ns CLK (16)
NC

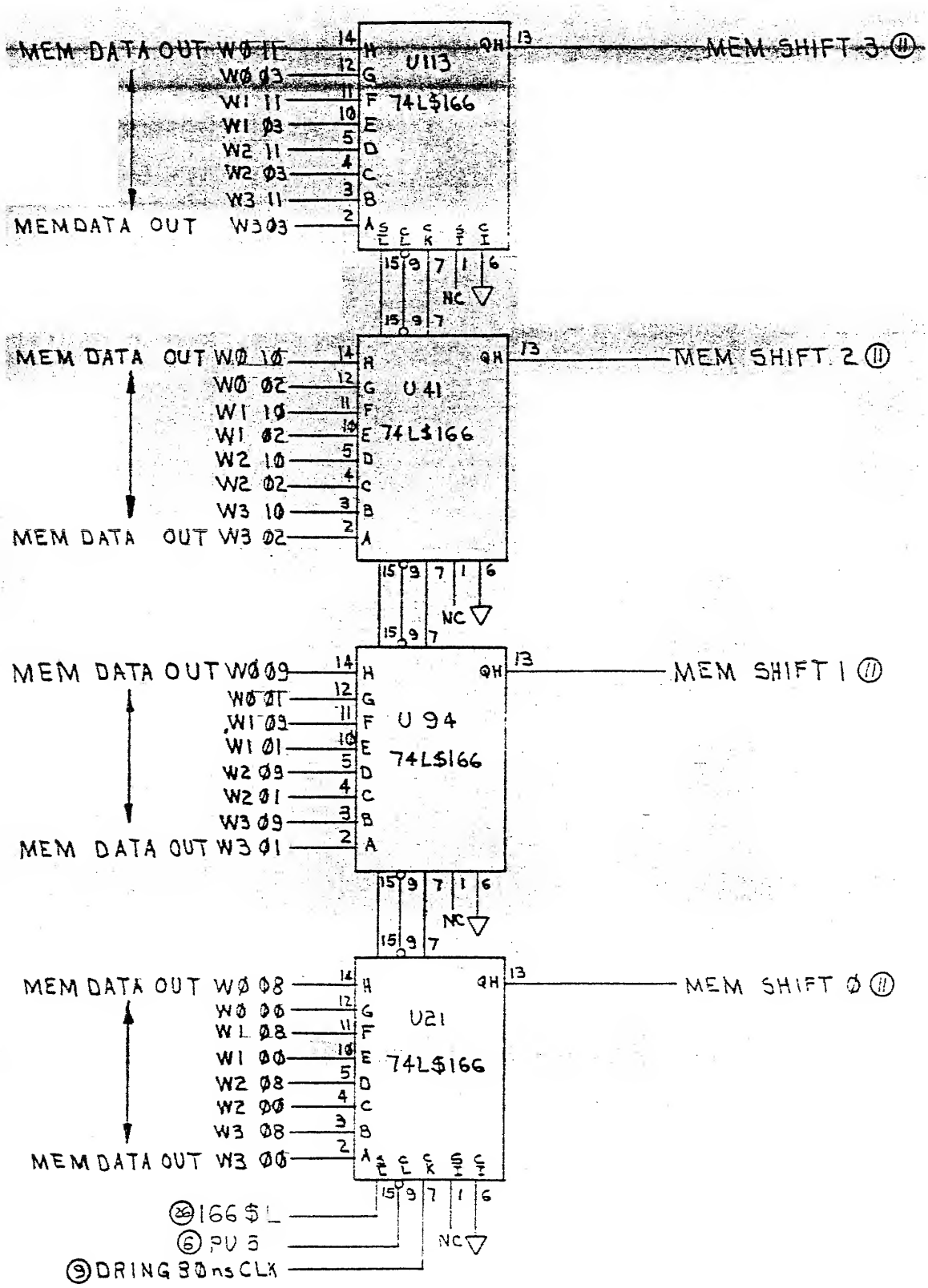
MEM DATA OUT W0 11
W0 03
W1 11
W1 03
W2 11
W2 03
W3 11
MEM DATA OUT W3 03
U113
74LS166
QH
MEM SHIFT 3 (11)
MEM DATA OUT W0 10
W0 02
W1 10
W1 02
W2 10
W2 02
W3 10
MEM DATA OUT W3 02
U41
74LS166
MEM SHIFT 2 (11)
MEM DATA OUT W0 09
W0 01
W1 09
W1 01
W2 09
W2 01
W3 09
MEM DATA OUT W3 01
U94
74LS166
MEM SHIFT 1 (11)
MEM DATA OUT W0 08
W0 00
W1 08
W1 00
W2 08
W2 00
W3 08
MEM DATA OUT W3 00
U21
74LS166
MEM SHIFT 0 (11)
(26) 166 $ L
(6) PU 5
(9) DRING 30ns CLK
NC

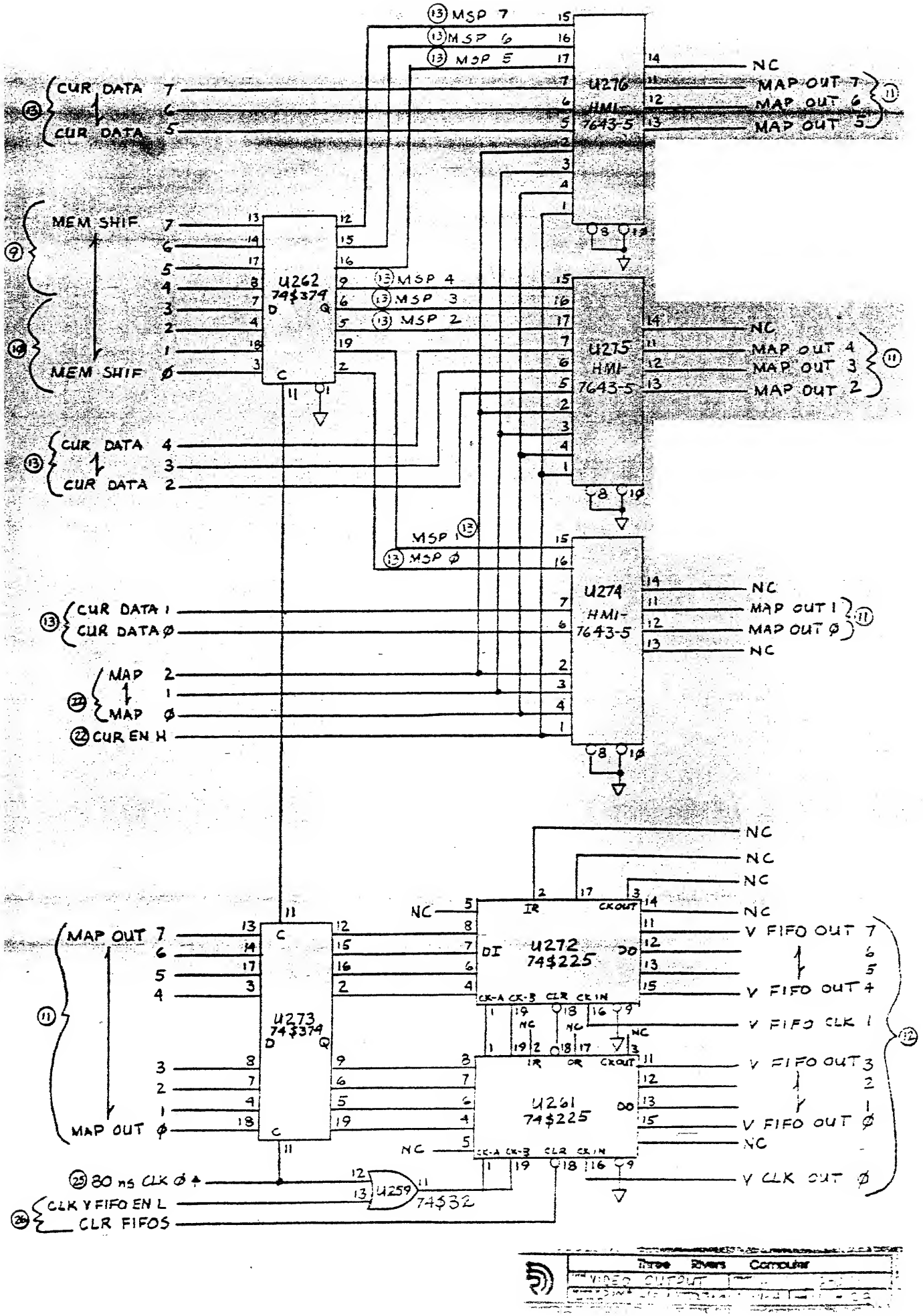
(13) MSP 7
(13) MSP 6
(13) MSP 5
CUR DATA 7
CUR DATA 6
CUR DATA 5
U276
HMI-7643-5
NC
MAP OUT 7
MAP OUT 6
MAP OUT 5
(11)
MEM SHIF 7
MEM SHIF 6
MEM SHIF 5
MEM SHIF 4
MEM SHIF 3
MEM SHIF 2
MEM SHIF 1
MEM SHIF Ø
(9)
(14)
U262
74S379
D Q
C
(13) MSP 4
(13) MSP 3
(13) MSP 2
U275
HMI-7643-5
NC
MAP OUT 4
MAP OUT 3
MAP OUT 2
CUR DATA 4
CUR DATA 3
CUR DATA 2
(13)
MSP 1
(13) MSP Ø
U274
HMI-7643-5
CUR DATA 1
CUR DATA Ø
NC
MAP OUT 1
MAP OUT Ø
NC
MAP 2
MAP 1
MAP Ø
(22)
(22) CUR EN H
NC
NC
NC
NC
V FIFO OUT 7
V FIFO OUT 4
V FIFO CLK 1
V FIFO OUT 3
V FIFO OUT Ø
NC
V CLK OUT Ø
(12)
U272
74S225
IR
CKOUT
DI
DO
CK-A CK-B CLR CK IN
U261
74S225
IR
OR
CKOUT
DO
CK-A CK-B CLR CK IN
MAP OUT 7
MAP OUT 6
MAP OUT 5
MAP OUT 4
MAP OUT 3
MAP OUT 2
MAP OUT 1
MAP OUT Ø
(11)
U273
74S379
D Q
C
(25) 80 ns CLK Ø
U259
74S32
(26) CLK V FIFO EN L
CLR FIFOS
Three Rivers Computer
VIDEO OUTPUT

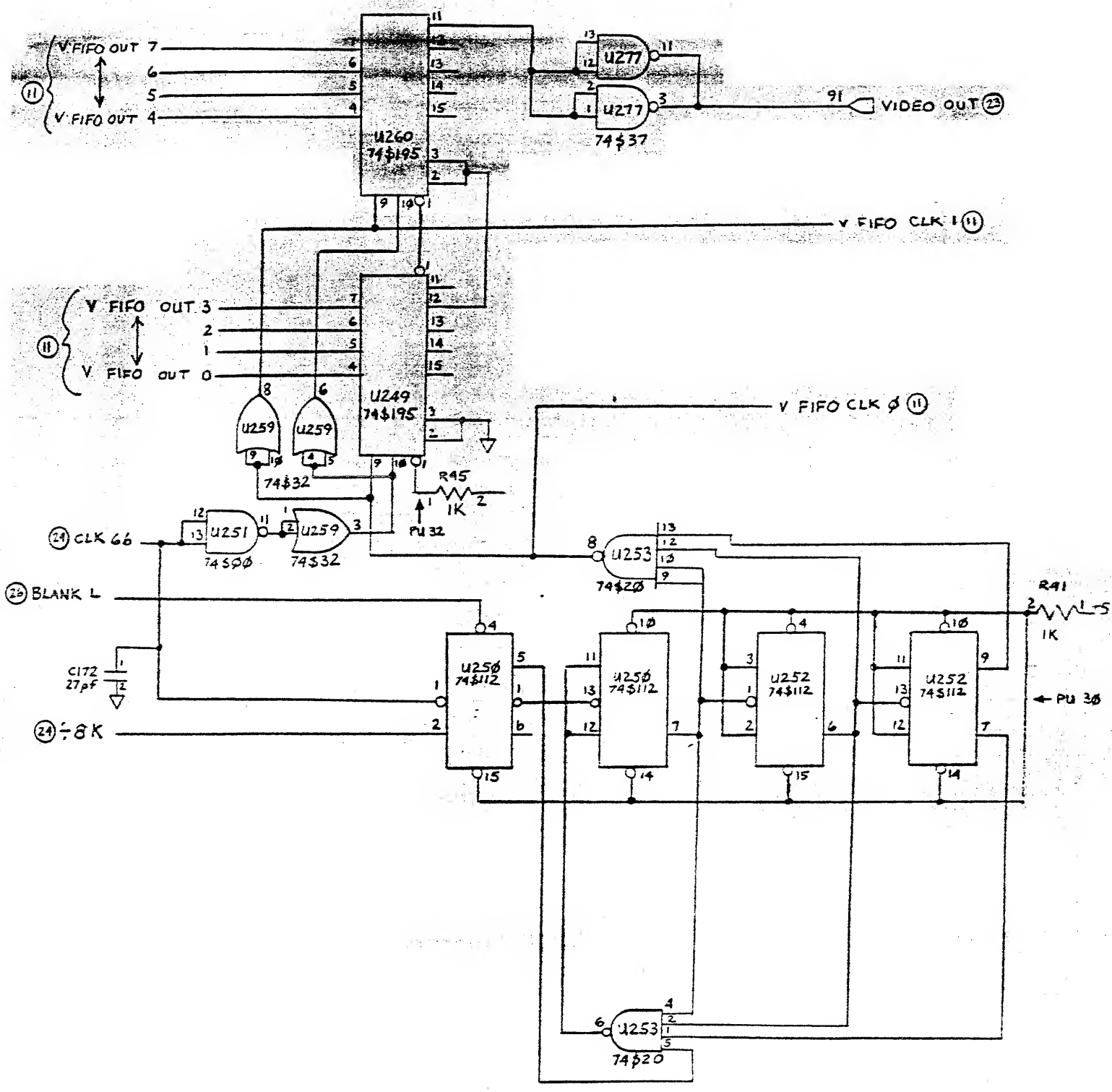

Three Rivers Computer
VIDEO OUTPUT

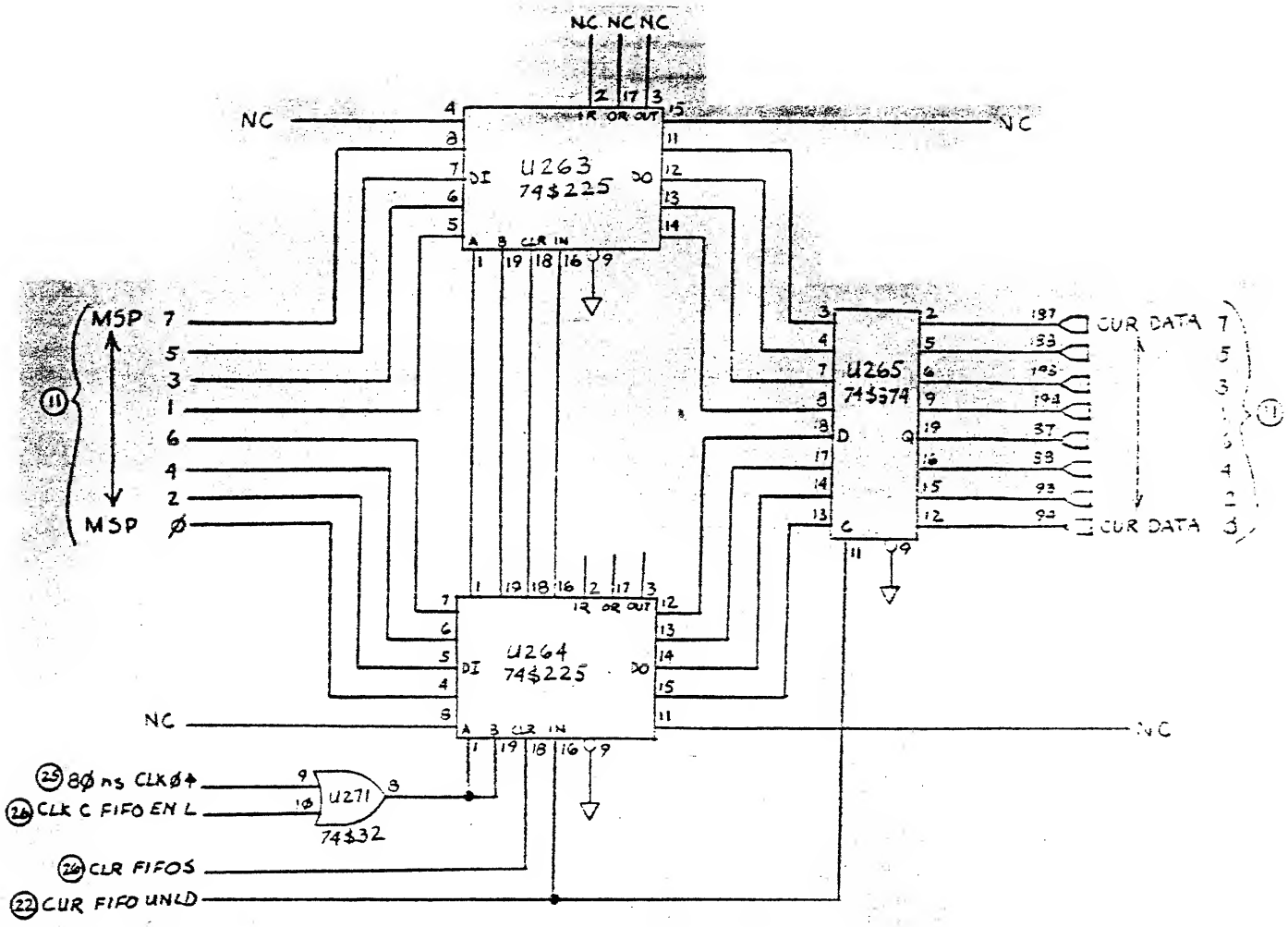
NC NC NC
NC
NC
U263
74$225
DI
DO
IR OR OUT
A B CLR IN
U265
74$374
D
Q
CUR DATA 7
CUR DATA 0
MSP 7
5
3
1
6
4
2
0
MSP
U264
74$225
NC
NC
25 80 ns CLKØ+
26 CLK C FIFO EN L
U271
74$32
26 CLR FIFOS
22 CUR FIFO UNLD

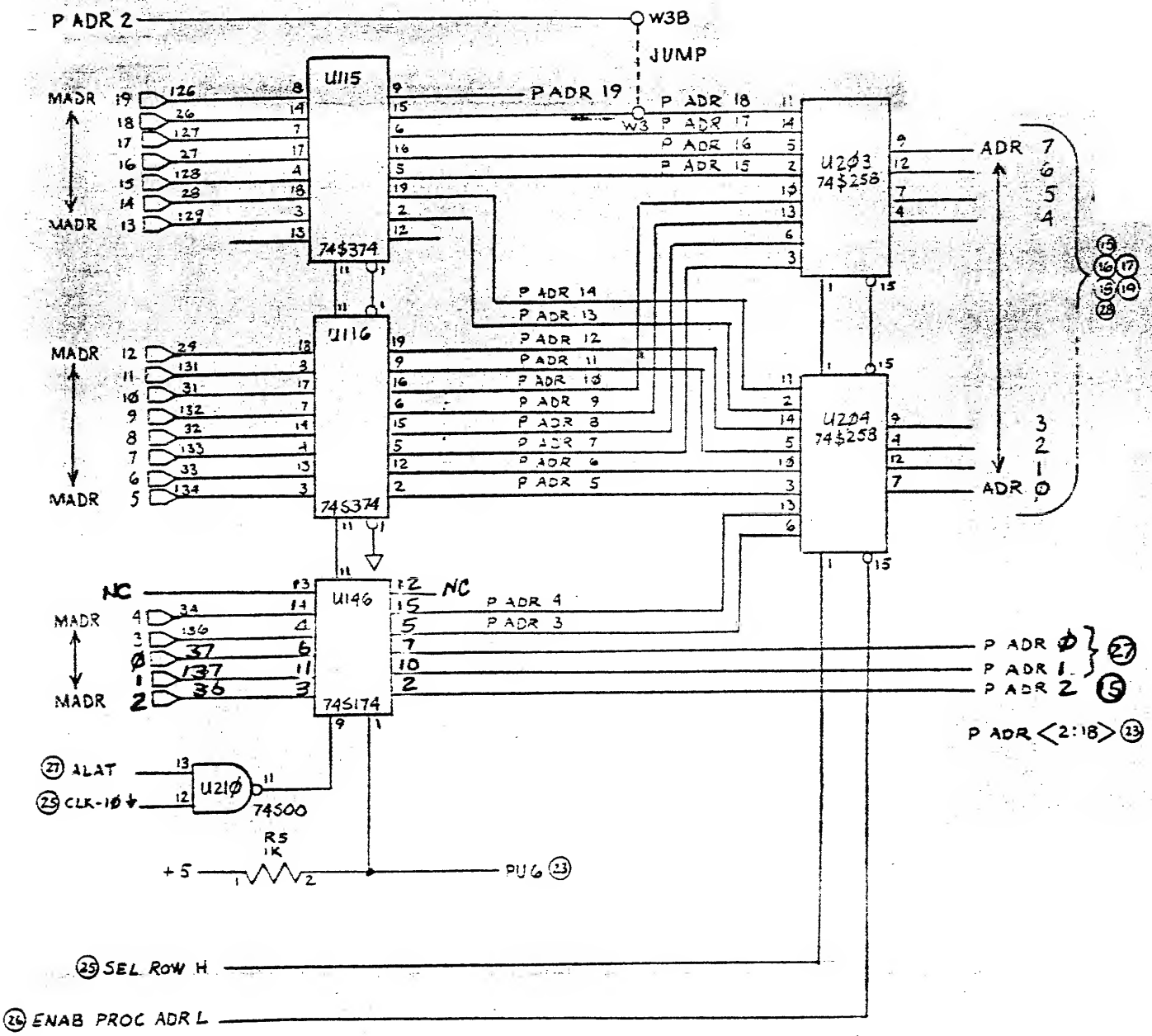
P ADR 2
W3B
JUMP
U115
74S374
MADR 19
MADR 18
MADR 17
MADR 16
MADR 15
MADR 14
MADR 13
P ADR 19
W3
P ADR 18
P ADR 17
P ADR 16
P ADR 15
U203
74S258
ADR 7
ADR 6
ADR 5
ADR 4
U116
74S374
MADR 12
MADR 11
MADR 10
MADR 9
MADR 8
MADR 7
MADR 6
MADR 5
P ADR 14
P ADR 13
P ADR 12
P ADR 11
P ADR 10
P ADR 9
P ADR 8
P ADR 7
P ADR 6
P ADR 5
U204
74S258
ADR 3
ADR 2
ADR 1
ADR 0
NC
U146
74S174
NC
P ADR 4
P ADR 3
MADR 4
MADR 3
MADR 0
MADR 1
MADR 2
P ADR 0
P ADR 1
P ADR 2
P ADR <2:18>
(27) ALAT
(25) CLK-10
U210
74S00
R5
1K
+5
PU6 (23)
(25) SEL ROW H
(26) ENAB PROC ADR L

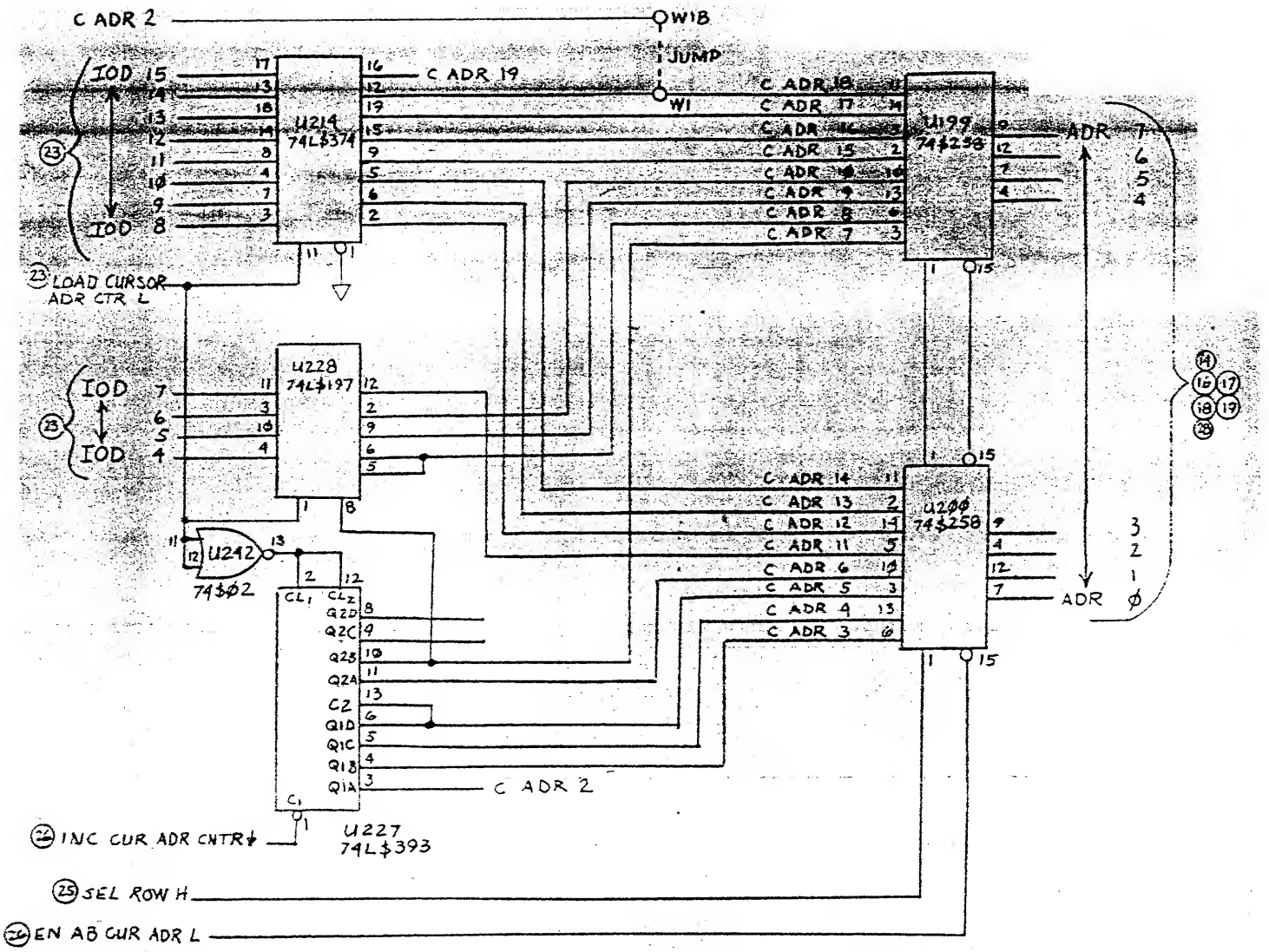
C ADR 2
W1B
JUMP
W1
IOD 15
IOD 8
U214
74LS374
C ADR 19
C ADR 18
C ADR 17
C ADR 16
C ADR 15
C ADR 10
C ADR 9
C ADR 8
C ADR 7
U199
74S258
ADR 7
6
5
4
LOAD CURSOR ADR CTR L
U228
74LS197
IOD 7
IOD 4
U242
74S02
C ADR 14
C ADR 13
C ADR 12
C ADR 11
C ADR 6
C ADR 5
C ADR 4
C ADR 3
U200
74S258
3
2
1
ADR Ø
Q2D
Q2C
Q2B
Q2A
C2
Q1D
Q1C
Q1B
Q1A
C ADR 2
U227
74LS393
INC CUR ADR CNTR L
SEL ROW H
EN AB CUR ADR L

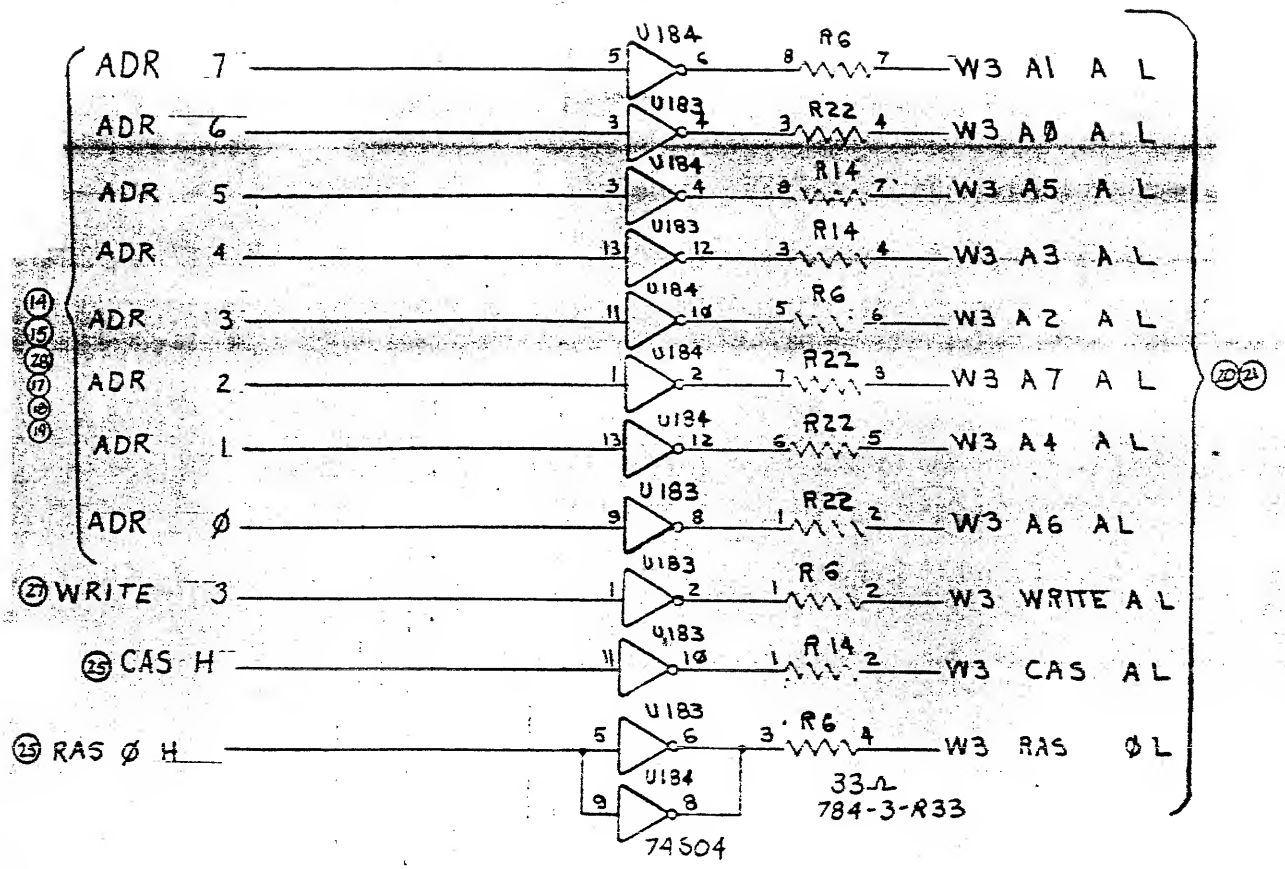
ADR 7
ADR 6
ADR 5
ADR 4
ADR 3
ADR 2
ADR 1
ADR Ø
WRITE 3
CAS H
RAS Ø H
U184
U183
R6
R22
R14
W3 A1 A L
W3 AØ A L
W3 A5 A L
W3 A3 A L
W3 A2 A L
W3 A7 A L
W3 A4 A L
W3 A6 AL
W3 WRITE A L
W3 CAS A L
W3 RAS ØL
33Ω
784-3-R33
74S04

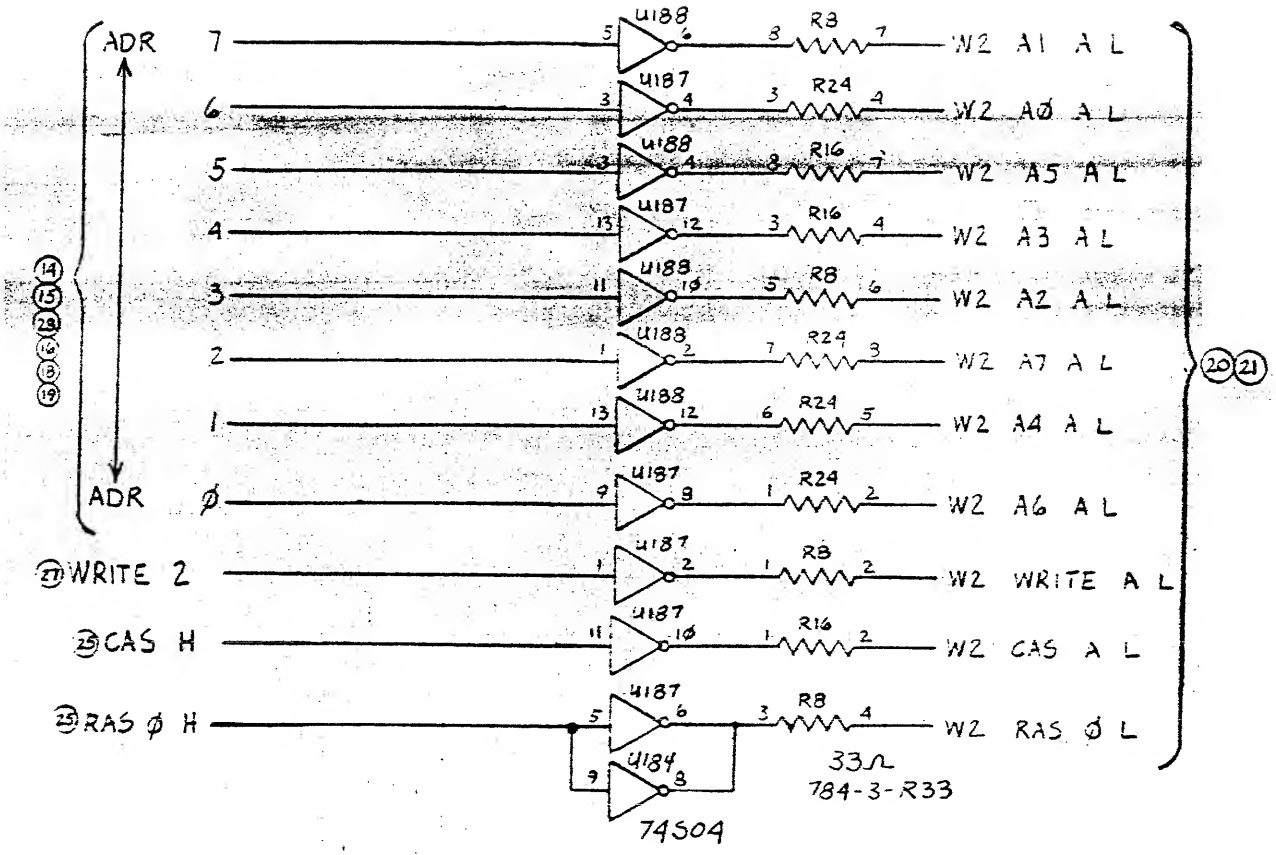
ADR
7
6
5
4
3
2
1
ADR
Ø
WRITE 2
CAS H
RAS Ø H
U188
U187
U184
R8
R24
R16
W2 A1 A L
W2 AØ A L
W2 A5 A L
W2 A3 A L
W2 A2 A L
W2 A7 A L
W2 A4 A L
W2 A6 A L
W2 WRITE A L
W2 CAS A L
W2 RAS Ø L
33Ω
784-3-R33
74S04

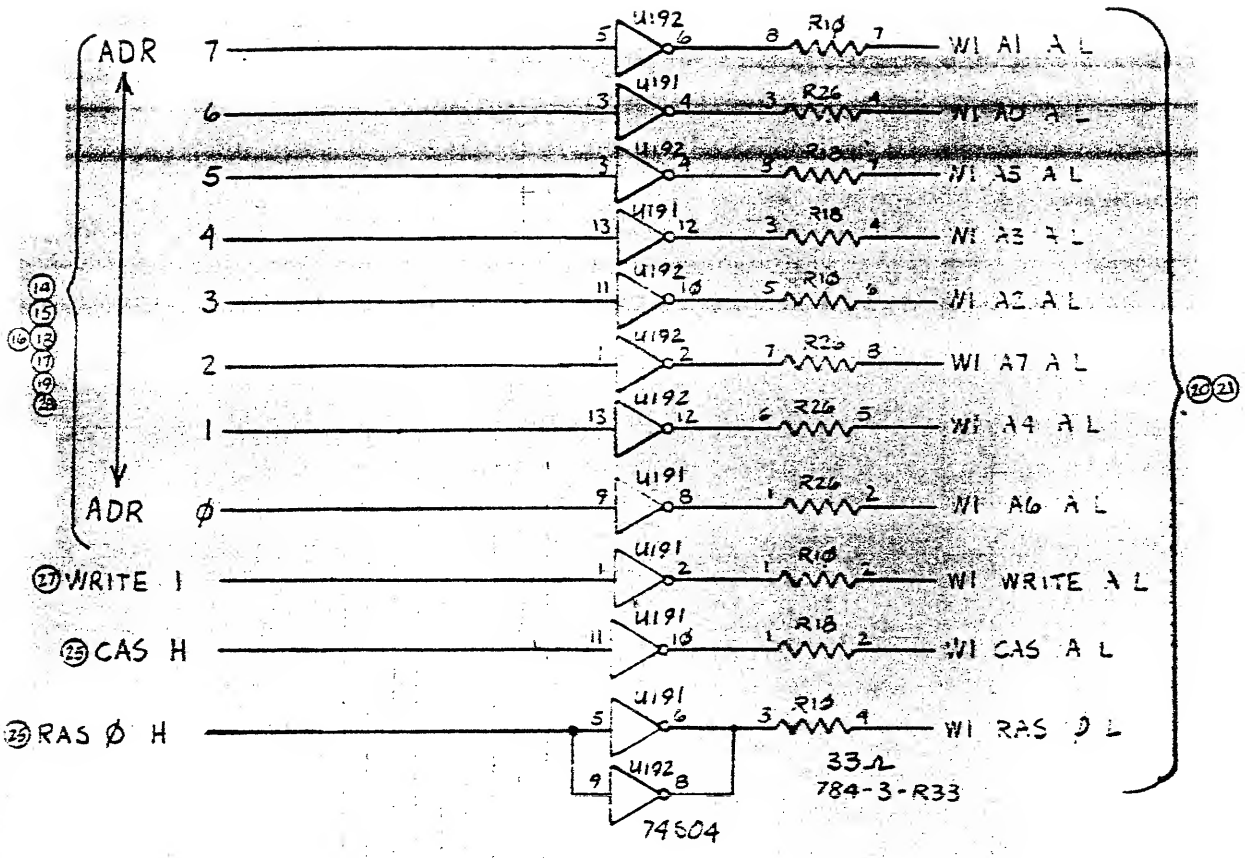
ADR 7
6
5
4
3
2
1
ADR Ø
U192
U191
R10
R26
R18
WI A1 A L
WI A0 A L
WI A5 A L
WI A3 A L
WI A2 A L
WI A7 A L
WI A4 A L
WI A6 A L
WI WRITE A L
WI CAS A L
WI RAS Ø L
WRITE I
CAS H
RAS Ø H
33Ω
784-3-R33
74S04

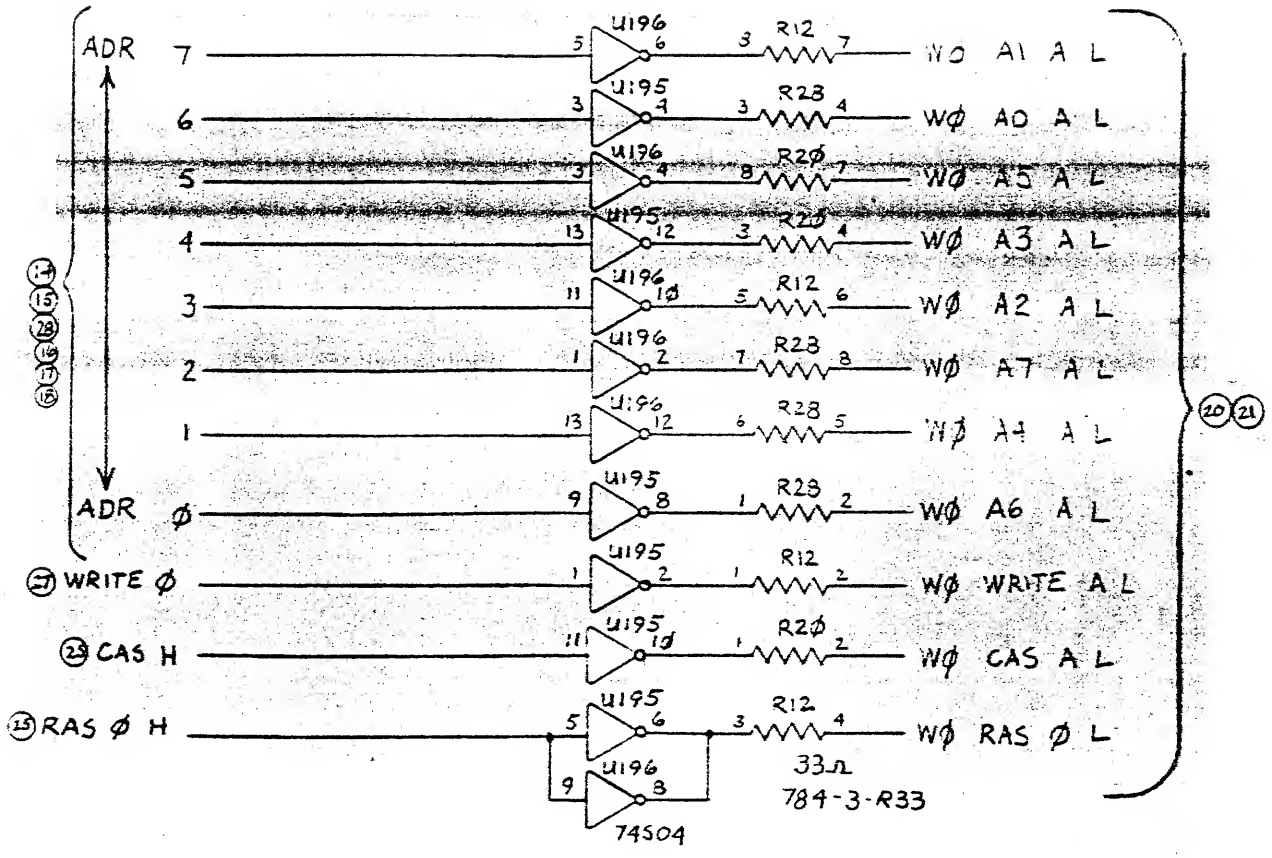
ADR
7
6
5
4
3
2
1
ADR Ø
WRITE Ø
CAS H
RAS Ø H
U196
U195
R12
R28
R2Ø
WØ A1 A L
WØ A0 A L
WØ A5 A L
WØ A3 A L
WØ A2 A L
WØ A7 A L
WØ A4 A L
WØ A6 A L
WØ WRITE A L
WØ CAS A L
WØ RAS Ø L
33Ω
784-3-R33
74S04

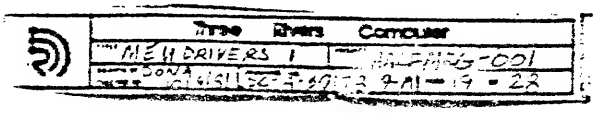
Rivers Computer
MEM DRIVERS 1
MAPPING-001

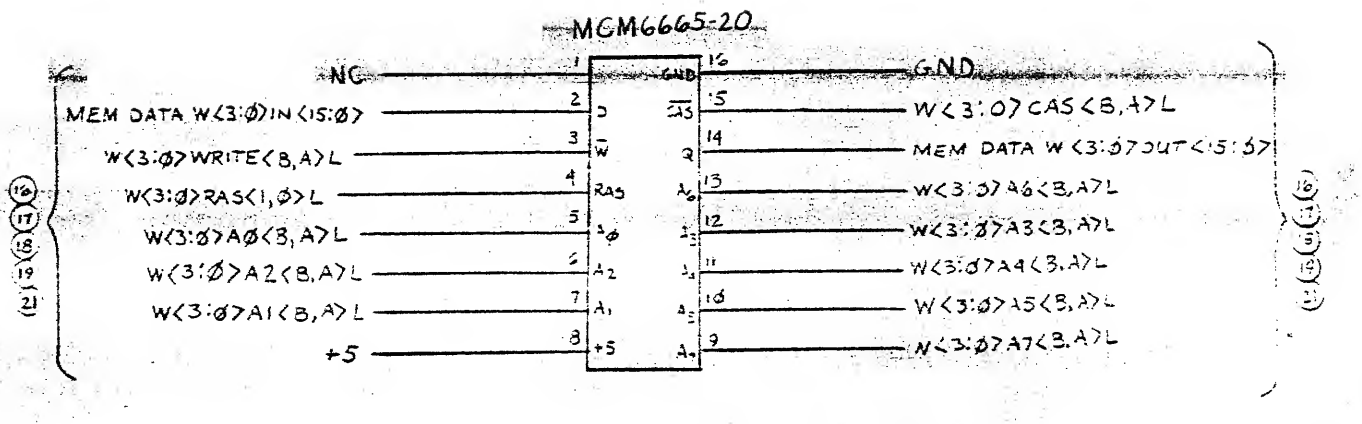

NOTE: I C TYPICAL 136 LOCATIONS ON RAM ARRAY PAGE (21)

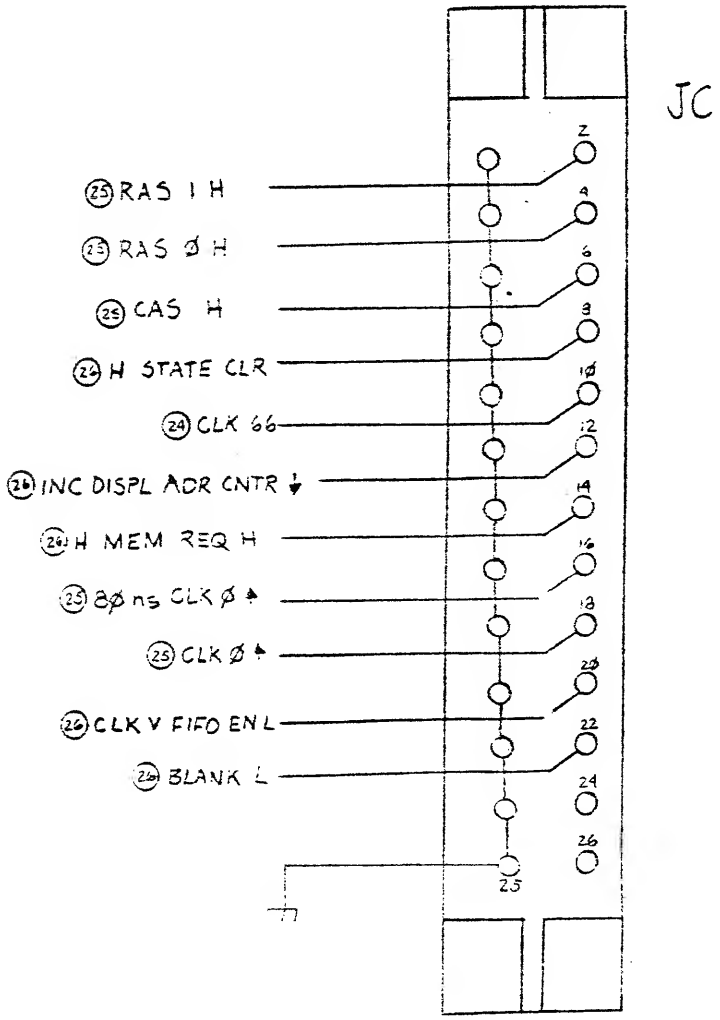

NEXT ASSY HALFMEG-001

THIS DOCUMENT IS NOT TO BE REPRODUCED IN ANY FORM, OR TRANSITTED IN WHOLE OR IN PART, WITHOUT PRIOR WRITTEN AUTHORIZATION OF Three Rivers Computer.

TITLE HALFMEG ARRAY

Three Rivers

DRAWN	DIV	1/5/82	SIZE	CODE	IDENTIFICATION	VAR	REV
CHECKED			A	SC	00178		A

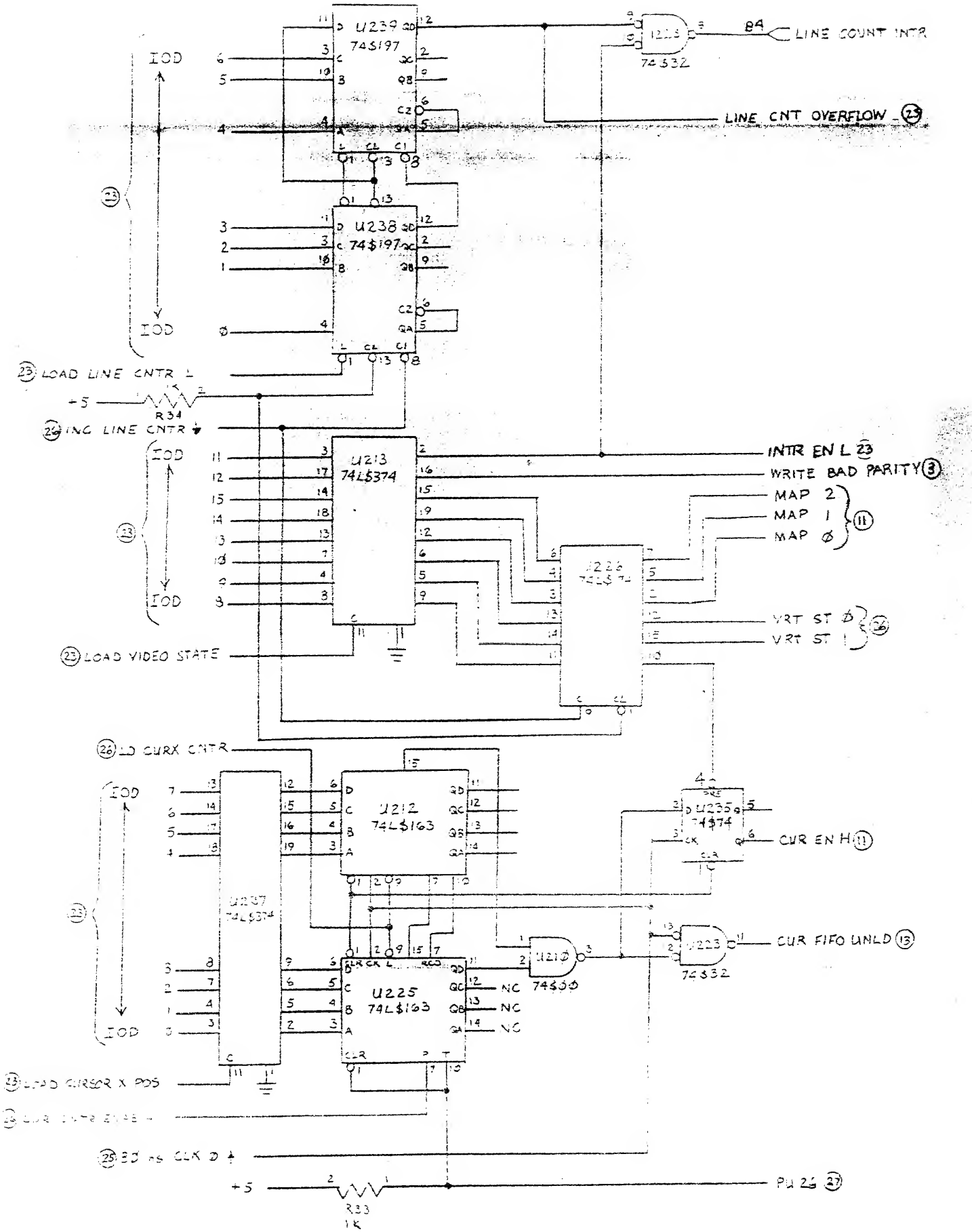

ECO# 00099

Prime	Rivers	Computer
I/O REGISTERS		HALFMEG-001

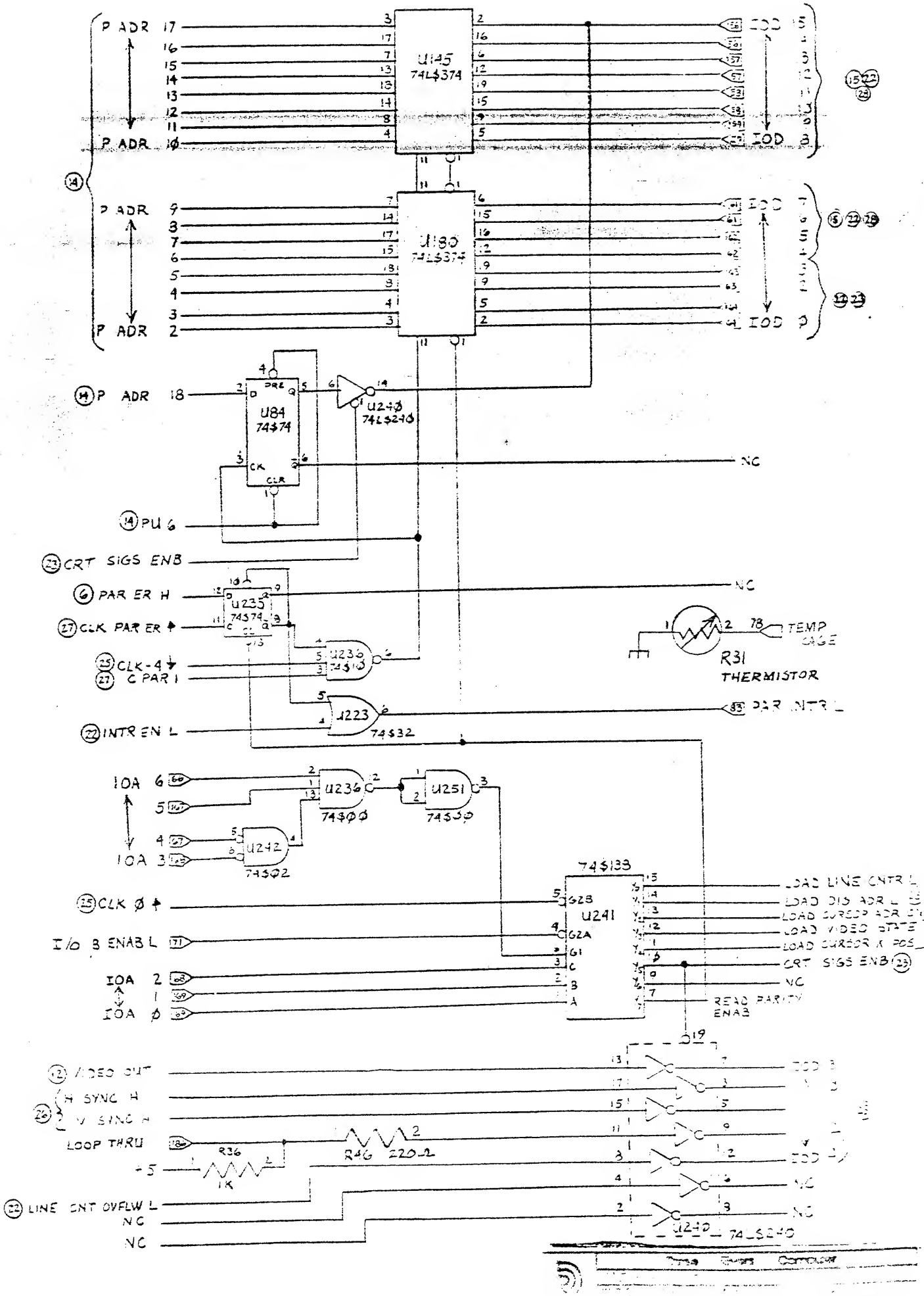
P ADR 17
16
15
14
13
12
11
P ADR 10
U145
74LS374
IOD 15
14
13
12
11
10
9
8
P ADR 9
8
7
6
5
4
3
P ADR 2
U180
74LS374
IOD 7
6
5
4
3
2
1
0
P ADR 18
U84
74S74
PRE
D
Q
CK
CLR
U240
74LS240
NC
PU 6
CRT SIGS ENB
PAR ER H
U235
74S74
CLK PAR ER
U236
74S10
CLK-4
C PAR 1
U223
74S32
INTR EN L
PAR INTR L
TEMP GAGE
R31
THERMISTOR
IOA 6
5
4
IOA 3
U236
74S00
U251
74S50
U242
74S02
74S138
U241
G2B
G2A
G1
C
B
A
CLK Ø
I/O B ENAB L
IOA 2
1
IOA Ø
LOAD LINE CNTR L
LOAD DIS ADR L
LOAD CURSOR ADR CNTR L
LOAD VIDEO STATE
LOAD CURSOR X POS
CRT SIGS ENB
NC
READ PARITY ENAB
VIDEO OUT
H SYNC H
V SYNC H
LOOP THRU
+5
R36
1K
R46
220Ω
LINE CNT OVFLW L
NC
NC
U240
74LS240
NC
NC

B = ECO NO. 00033 DIV 12/5/81

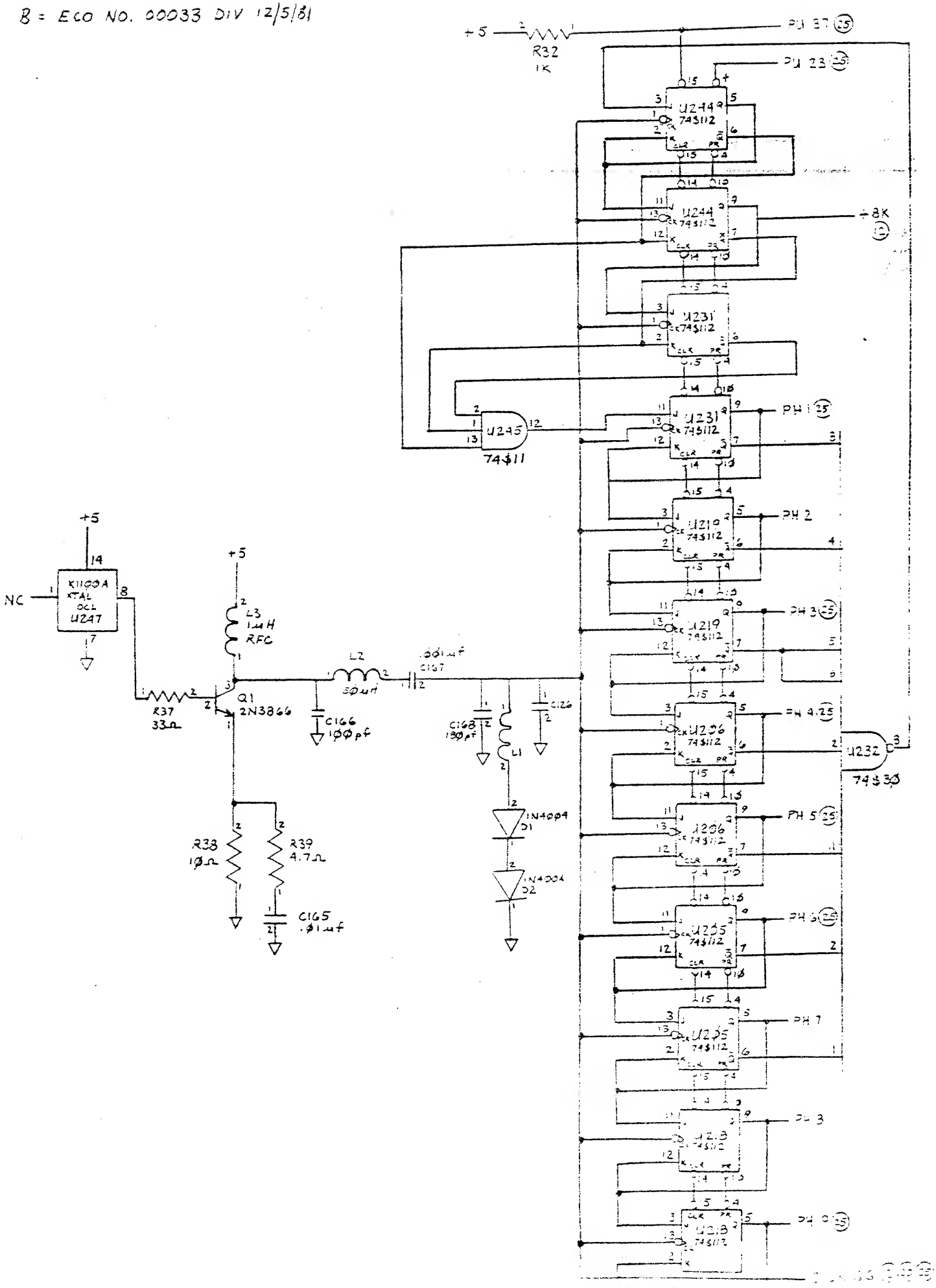

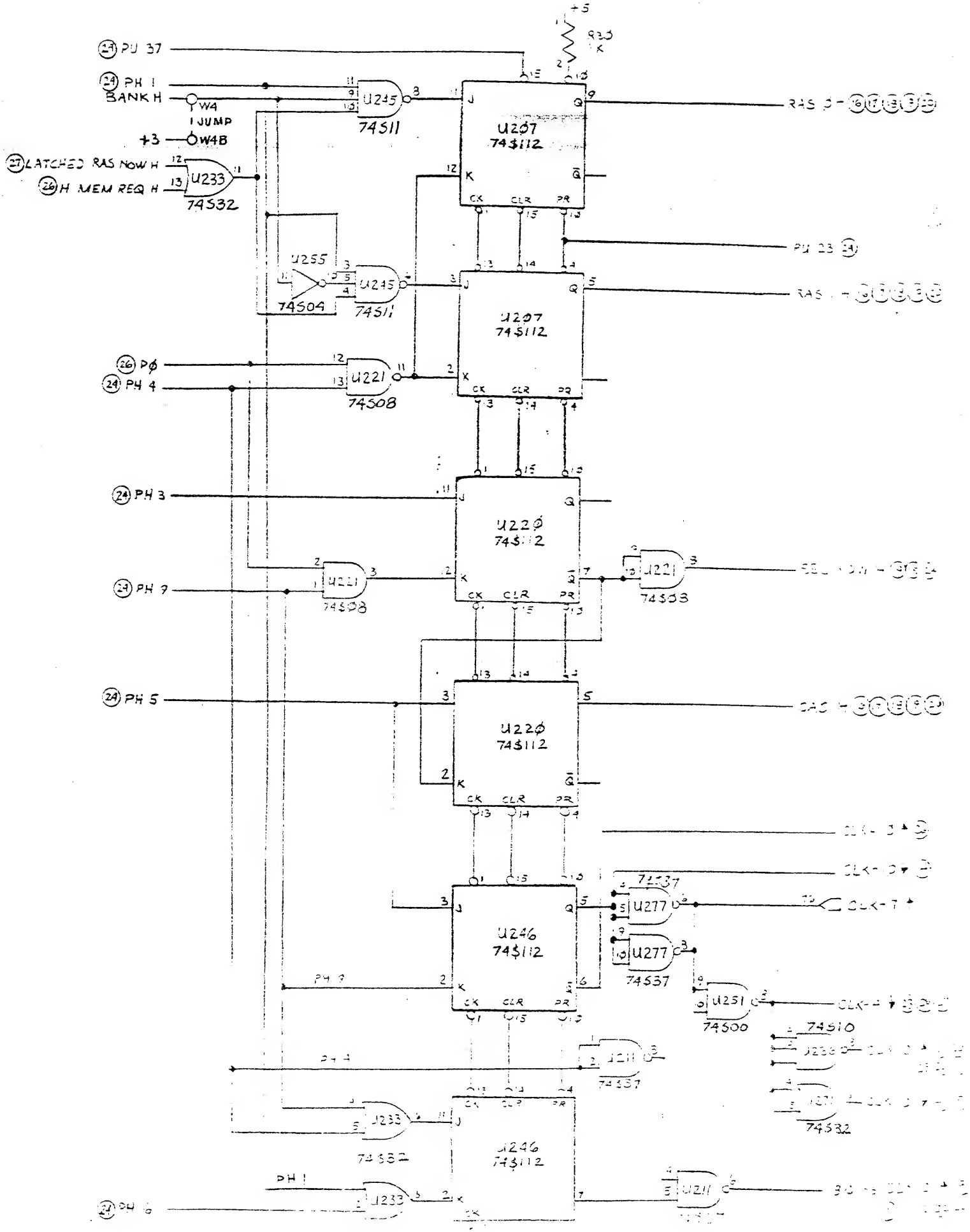

PU 37
PH 1
BANK H
W4
1 JUMP
+3
W4B
LATCHED RAS NOW H
H MEM REQ H
U233
74S32
U245
74S11
U207
74S112
U255
74S04
PU 23
PØ
PH 4
U221
74S08
PH 3
U220
74S112
PH 9
PH 5
U246
74S112
U277
74S37
U251
74S00
74S10
74S32
PH 1
PH 6

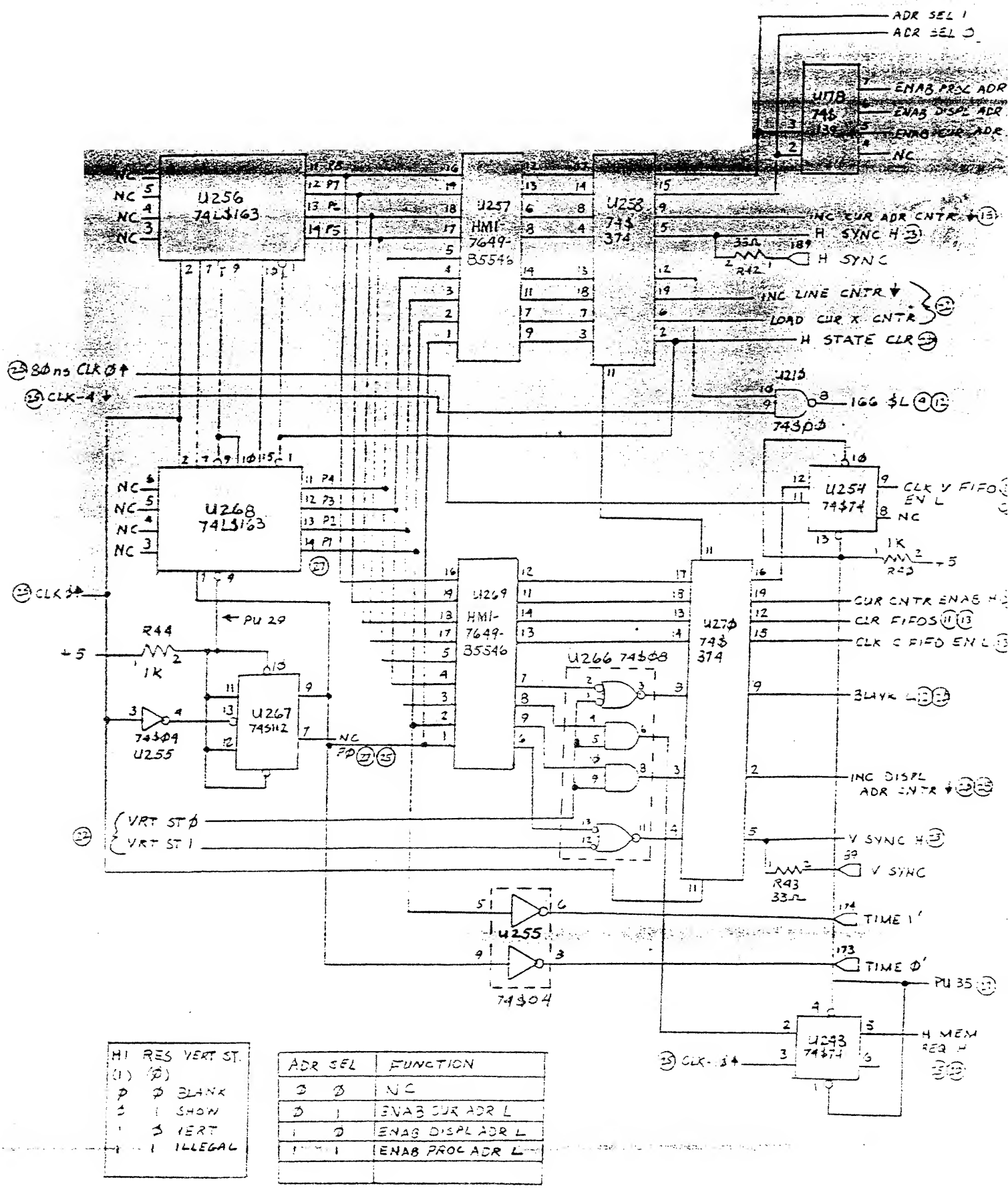

HI RES VERT ST. (1) (Ø)	
Ø	Ø BLANK
Ø	1 SHOW
1	Ø VERT
1	1 ILLEGAL

ADR SEL		FUNCTION
Ø	Ø	NC
Ø	1	ENAB CUR ADR L
1	Ø	ENAB DISPL ADR L
1	1	ENAB PROC ADR L

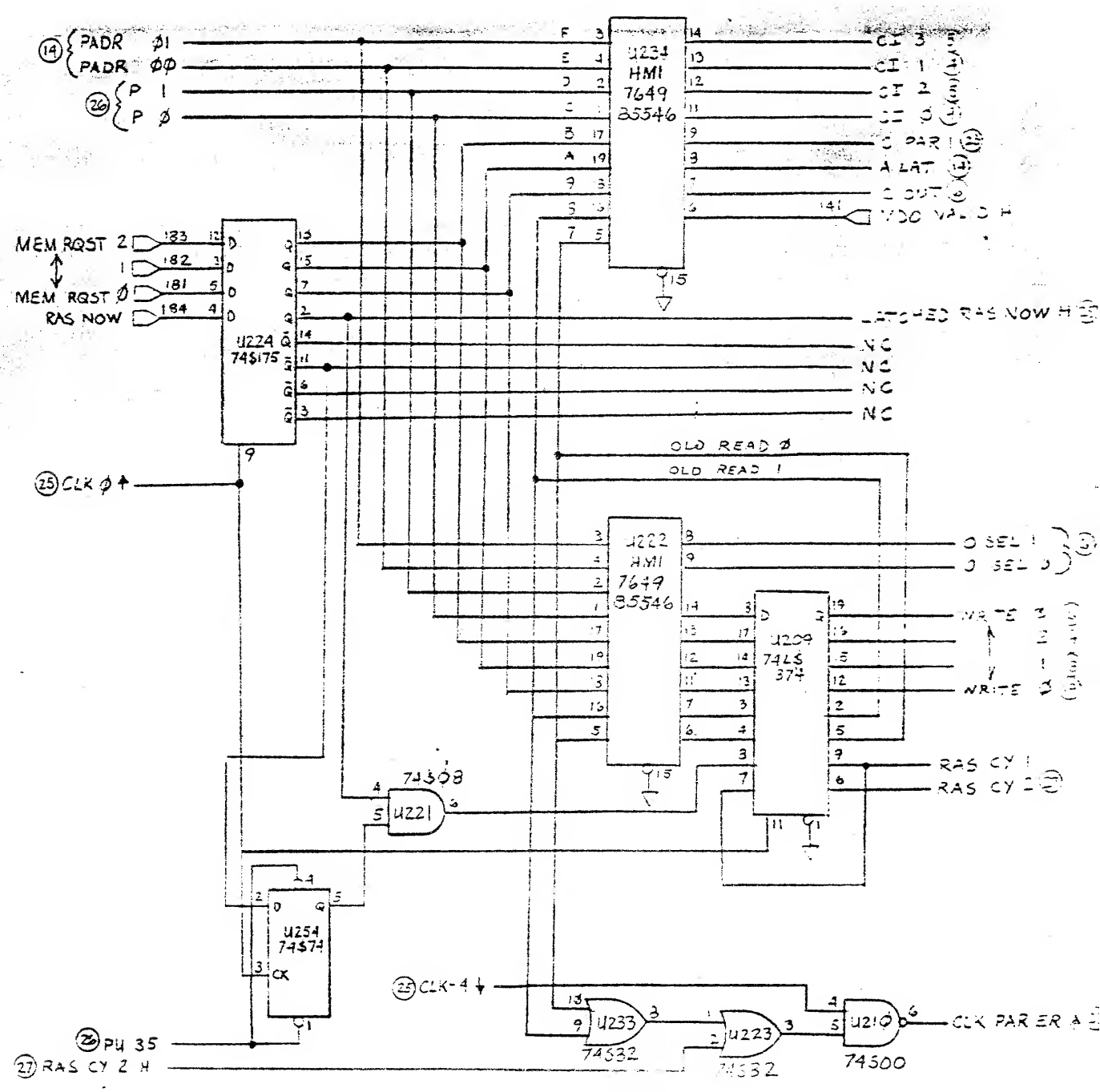
PADR Ø1
PADR ØØ
P 1
P Ø
U234 HMI 7649 85546
MEM RQST 2
MEM RQST Ø
RAS NOW
U224 74S175
LATCHED RAS NOW H
NC
NC
NC
NC
OLD READ Ø
OLD READ 1
CLK Ø
U222 HMI 7649 85546
U209 74LS 374
WRITE
RAS CY 1
RAS CY 2
74S08
U221
U254 74S74
CLK-4
U233
74S32
U223
74S32
U210
74S00
PH 35
RAS CY 2 H

Meg

	Initials	Date
Prepared By	DIV	
Approved By		

				Pg.
1	U	41	74LS166	10
2	U	42	745374	9
3	U	43	74S51	3
4	U	44	745374	5
5	U	45	MCM6665-20	20
6	U	46		
7	U	47		
8	U	48		
9	U	49		
10	U	50		
11	U	51		
12	U	52	MCM6665-20	20
13	U	53	745374	7
14	U	54	SPARE	—
15	U	55	MCM6665-20	20
16	U	56		
17	U	57		
18	U	58		
19	U	59		
20	U	60		
21	U	61		
22	U	62	MCM6665-20	20
23	U	63	74LS166	9
24	U	64	74S374	7
25	U	65	745374	5
26	U	66	MCM6665-20	20
27	U	67		
28	U	68		
29	U	69		
30	U	70		
31	U	71		
32	U	72		
33	U	73		
34	U	74		
35	U	75		
36	U	76		
37	U	77		
38	U	78		
39	U	79		
40	U	80	MCM6665-20	20
41				

	Initials	Date
Prepared By	DIV	
Approved By		

1	U	81	MCM6665-20	20
2	U	82	74LS166	9
3	U	83	74S280	16
4	U	84	74S74	23
5	U	85	74S374	4
6	U	86	MCM6665-20	20
7	U	87		
8	U	88		
9	U	89		
10	U	90		
11	U	91		
12	U	92		
13	U	93	MCM6665-20	20
14	U	94	74LS166	10
15	U	95	74S374	8
16	U	96	MCM6665-20	20
17	U	97		
18	U	98		
19	U	99		
20	U	100		
21	U	101		
22	U	102		
23	U	103	MCM6665-20	20
24	U	104	74S374	4
25	U	105	MCM6665-20	20
26	U	106		
27	U	107		
28	U	108		
29	U	109		
30	U	110		
31	U	111		
32	U	112	MCM6665-20	20
33	U	113	74LS166	10
34	U	114	74S374	8
35	U	115	74S374	14
36	U	116	74S374	14
37	U	117	MCM6665-20	20
38	U	118		
39	U	119		
40	U	120	MCM-6665-20	20

	Initials	Date
Prepared By	DIV	
Approved By		

			Pc.
1	U	121	MCM6665-20	20
2	U	122		
3	U	123		
4	U	124		
5	U	125		
6	U	126		
7	U	127		
8	U	128		
9	U	129		
10	U	130		
11	U	131		
12	U	132		
13	U	133		
14	U	134	MCM6665-20	20
15	U	135	74LS166	9
16	U	136	MCM6665-20	20
17	U	137		
18	U	138		
19	U	139		
20	U	140		
21	U	141		
22	U	142		
23	U	143	MCM6665-20	20
24	U	144	74S374	7
25	U	145	74LS374	23
26	U	146	74S174	14
27	U	147	74S374	5
28	U	148	MCM6665-20	20
29	U	149		
30	U	150		
31	U	151		
32	U	152		
33	U	153		
34	U	154		
35	U	155		
36	U	156		
37	U	157		
38	U	158		
39	U	159		
40	U	160	MCM6665-20	20
41				

	Initials	Date
Prepared By	DIV	
Approved By		

			PG.
1	U 161	MCM6665-20	20
2	U 162		
3	U 163		
4	U 164		
5	U 165		
6	U 166	MCM6665-20	20
7	U 167	74S175	6
8	U 168	74S153	6
9	U 169	74S74	3
10	U 170	MCM6665-20	20
11	U 171		
12	U 172		
13	U 173		
14	U 174		
15	U 175		
16	U 176		
17	U 177	MCM6665-20	20
18	U 178	74S139	6,26
19	U 179	SPARE	—
20	U 180	74LS374	23
21	U 181	74S08	3
22	U 182	SPARE	—
23	U 183	74S04	16
24	U 184		16
25	U 185		16
26	U 186		16
27	U 187		17
28	U 188		17
29	U 189		17
30	U 190		17
31	U 191		18
32	U 192		18
33	U 193		18
34	U 194		18
35	U 195		19
36	U 196		19
37	U 197		19
38	U 198	74S04	19
39	U 199	74S258	15
40	U 200	74S258	15
41			

Tulsa Rivers Computer

Initials	Date
Prepared By: DIV	
Approved By:	

				PG.
1	U	201	74S258	28
2	U	202	74S258	28
3	U	203	74S258	14
4	U	204	74S258	14
5	U	205	74S112	24
6	U	206	74S112	24
7	U	207	74S112	25
8	U	208	74S00	4, 5
9	U	209	74LS374	27
10	U	210	74S00	14, 22, 26, 27
11	U	211	74S37	25
12	U	212	74LS163	22
13	U	213	74LS374	22
14	U	214	74LS374	15
15	U	215	74LS197	28
16	U	216	74LS197	28
17	U	217	74LS393	28
18	U	218	74S112	24
19	U	219	74S112	24
20	U	220	74S112	25
21	U	221	74S08	25, 27
22	U	222	HMI-7649-B5546	27
23	U	223	74S175	27
24	U	224	74S175	27
25	U	225	74LS163	22
26	U	226	74LS174	22
27	U	227	74LS393	15
28	U	228	74LS197	15
29	U	229	74LS197	28
30	U	230	74S153	
31	U	231	74S112	24
32	U	232	74S30	24
33	U	233	74S32	25, 27
34	U	234	HMI-7649-B5546	27
35	U	235	74S74	22, 23
36	U	236	74S10	23, 25
37	U	237	74LS374	22
38	U	238	74S197	22
39	U	239	74S197	22
40	U	240	74LS240	23

Initials	Date
Prepared By	DIV
Approved By	

			PG
U	241	74S138	23
U	242	74S02	6, 15, 23
U	243	74S74	26
U	244	74S112	24
U	245	74S11	24, 25
U	246	74S112	25
U	247	K1100A	24
U	248	SPARE	-
U	249	74S195	12
U	250	74S112	12
U	251	74S00	12, 23, 25
U	252	74S112	12
U	253	74S20	12
U	254	74S74	26, 27
U	255	74S04	25, 26
U	256	74LS163	26
U	257	HMI-7649-B5546	26
U	258	74S374	26
U	259	74S32	11, 12
U	260	74S195	12
U	261	74S225	11
U	262	74S374	11
U	263	74S225	13
U	264	74S225	13
U	265	74S374	13
U	266	74S08	26
U	267	74S112	26
U	268	74LS163	26
U	269	HMI-7649-B5546	26
U	270	74S374	26
U	271	74S32	13, 25
U	272	74S225	11
U	273	74S374	11
U	274	HMI-7643-5	11
U	275	HMI-7643-5	11
U	276	HMI-7643-5	11
U	277	74S37	12, 25

	Initials	Date
Prepared By	DIY	
Approved By		

			PG
1	R 1	CB1025	4
2	R 2	CB1025	3
3	R 3	CB4705	9
4	R 4	CB1025	6
5	R 5	CB1025	14
6	R 6	784-3-R33	16
7	R 7		16
8	R 8		17
9	R 9		17
10	R 10		18
11	R 11		18
12	R 12		19
13	R 13		19
14	R 14		16
15	R 15		16
16	R 16		17
17	R 17		17
18	R 18		18
19	R 19		18
20	R 20		19
21	R 21		19
22	R 22		16
23	R 23		16
24	R 24		17
25	R 25		17
26	R 26		18
27	R 27		18
28	R 28		19
29	R 29	784-3-R33	19
30	R 30	CB1025	25
31	R 31	JA41J1	23
32	R 32	CB1025	24
33	R 33	CB1025	22
34	R 34	CB1025	22
35	R 35	CB1025	28
36	R 36	CB1025	23
37	R 37	CB3305	24
38	R 38	CB1005	24
39	R 39	CB4G75	24
40	R 40	CB1025	24

REV B = ECO # D0035 DIV 1/8/87

	Initials	Date
Prepared By	DIV	
Approved By		

		PG
R 41	CB1025	12
R 42	CB3305	26
R 43	CB3305	26
R 44	CB1025	26
R 45	CB1025	12
R 46	CB2215	23
D 1	IN4004	24
D 2	IN4004	24
Q 1	2N3866	24
L 1	NEE-1.0 uH	24
L 2	6317-4	24
L 3	WEE-1.0 uH	24

	QTY	LOCATIONS
514AG37D	1	U247
516AG37D	8	U21, U41, U63, U82, U94, U113, U135, U156
518AG37D	3	U274, U275, U276
520AG37D	4	U222, U234, U257, U269

C 1	202A200225M1
C 2	↑
C 3	↕
C 4	↓
C 5	202A200225M1
C 6	CY15C103M
C 7	↕
C 8	CY15C103M
C 9	202A200225M1
C 10	↕
C 11	202A200225M1
C 12	CY15C103M
C 13	CY15C103M
C 14	CY15C103M
C 15	202A200225M1
C 16	CY15C103M
C 17	CY15C103M
C 18	202A200225M1

Initials	Date
Prepared By DIV	
Approved By	

C	19	CY15C103M
C	20	
C	21	CY15C103M
C	22	202A200225MI
C	23	CY15C103M
C	24	202A200225MI
C	25	
C	26	
C	27	
C	28	
C	29	
C	30	202A200225MI
C	31	CY15C103M
C	32	202A200225MI
C	33	CY15C103M
C	34	
C	35	CY15C103M
C	36	202A200225MI
C	37	202A200225MI
C	38	CY15C103M
C	39	
C	40	CY15C103M
C	41	202A200225MI
C	42	CY15C103M
C	43	202A200225MI
C	44	202A200225MI
C	45	CY15C103M
C	46	
C	47	CY15C103M
C	48	202A200225MI
C	49	CY15C103M
C	50	CY15C103M
C	51	202A200225MI
C	52	
C	53	
C	54	
C	55	
C	56	
C	57	
C	58	202A200225MI

	Initials	Date
Prepared By	DIV	
Approved By		

1	C	59	CY15C103M	
2	C	60		
3	C	61	CY15C103M	
4	C	62	202A200225M1	
5	C	63	202A200225M	
6	C	64	CY15C103M	
7	C	65	↕	
8	C	66	CY15C103M	
9	C	67	202A200225M1	
10	C	68	CY15C103M	
11	C	69	202A200225M1	
12	C	70	202A200225M1	
13	C	71	CY15C103M	
14	C	72	↕	
15	C	73	CY15C103M	
16	C	74	202A200225M1	
17	C	75	202A200225M1	
18	C	76	CY15C103M	
19	C	77	CY15C103M	
20	C	78	202A200225M1	
21	C	79	↕	
22	C	80		
23	C	81		
24	C	82		
25	C	83		
26	C	84	↕	
27	C	85	202A200225M1	
28	C	86	CY15C103M	
29	C	87	↕	
30	C	88	CY15C103M	
31	C	89	202A200225M1	
32	C	90	CY15C103M	
33	C	91	202A200225M1	
34	C	92	CY15C103M	
35	C	93	↕	
36	C	94	CY15C103M	
37	C	95	202A200225M1	
38	C	96	CY15C103M	
39	C	97	CY15C103M	
40	C	98	202A200225M1	

Initials	Date
Prepared By	DIV	
Approved By		

1	C	99	202A200225MI
2	C	100	CY15C103M
3	C	101	↕
4	C	102	CY15C103M
5	C	103	202A200225MI
6	C	104	CY15C103M
7	C	105	202A200225MI
8	C	106	↑
9	C	107	|
10	C	108	↓
11	C	109	202A200225MI
12	C	110	CY15C103M
13	C	111	202A200225MI
14	C	112	202A200225MI
15	C	113	CY15C103M
16	C	114	202A200225MI
17	C	115	202A200225MI
18	C	116	CY15C103M
19	C	117	202A200225MI
20	C	118	↑
21	C	119	|
22	C	120	|
23	C	121	|
24	C	122	|
25	C	123	|
26	C	124	↓
27	C	125	202A200225MI
28	C	126	SPARE
29	C	127	CY15C103M
30	C	128	↑
31	C	129	|
32	C	130	|
33	C	131	↓
34	C	132	CY15C103M
35	C	133	202A200225MI
36	C	134	CY15C103M
37	C	135	CY15C103M
38	C	136	202A200225MI
39	C	137	↕
40	C	138	202A200225MI
41			

Three Rivers Computer

	Initials	Date
Prepared By	DIV	
Approved By		

1	C	139	202A200225MI	
2	C	140	CY15C103M	
3	C	141	CY15C103M	
4	C	142	202A200225MI	
5	C	143	CY15C103M	
6	C	144	202A200225MI	
7	C	145	CY15C103M	
8	C	146		
9	C	147		
10	C	148		
11	C	149		
12	C	150		
13	C	151		
14	C	152	CY15C103M	
15	C	153	202A200225MI	
16	C	154	CY15C103M	
17	C	155	CY15C103M	
18	C	156	202A200225MI	
19	C	157	CY15C103M	
20	C	158	202A200225MI	
21	C	159	CY15C103M	
22	C	160	202A200225MI	
23	C	161	202A200225MI	
24	C	162	CY15C103M	
25	C	163	202A200225MI	
26	C	164	CY15C103M	
27	C	165	CY15C103M	
28	C	166	DD101	
29	C	167	DD102	
30	C	168	DD181	
31	C	169	CY15C103M	
32	C	170	202A200225MI	
33	C	171	CY15C103M	
34	C	172	DD270	
35	C	173	CY15C103M	
36	C	174	202A200225MI	
37	C	175	CY15C103M	
38	C	176	202A200225MI	
39	C	177	CY15C103M	
40	C	[illegible]	202A200225MI	

	Initials	Date
Prepared By	DIV	
Approved By		

1	C	179	CY15C103M	
2	C	180	202A200225M1	
3	C	181	CY15C103M	
4	C	182	202A200225M1	
5	C	183	CY15C103M	
6	C	184	CY15C103M	
7	C	185	202A200225M1	
8	C	186	↕	
9	C	187	202A200225M1	
10	C	188	CY15C103M	
11	C	189	202A200225M1	

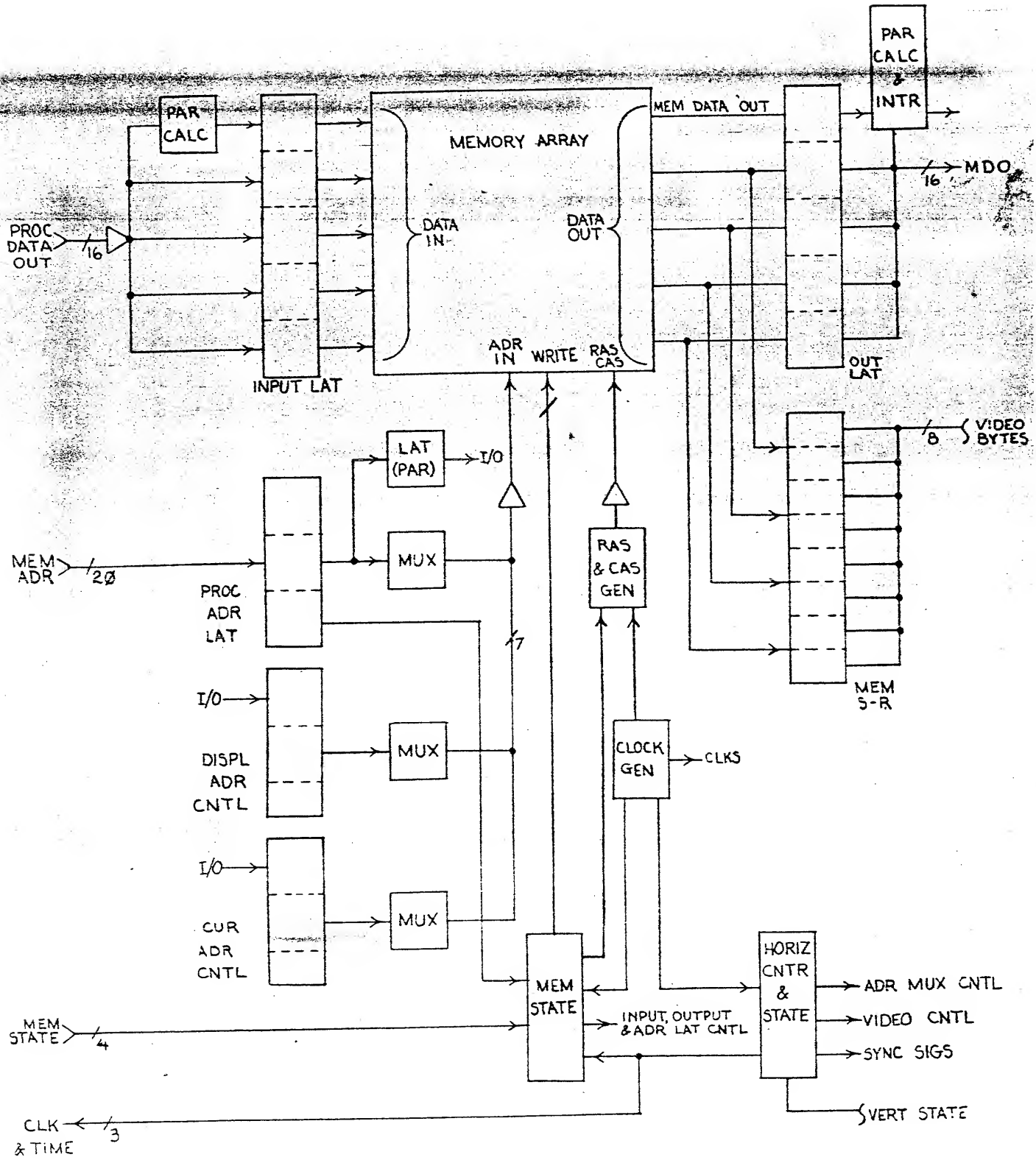

Three Rivers Computer

BLOCK DIAG

MEG-001

1

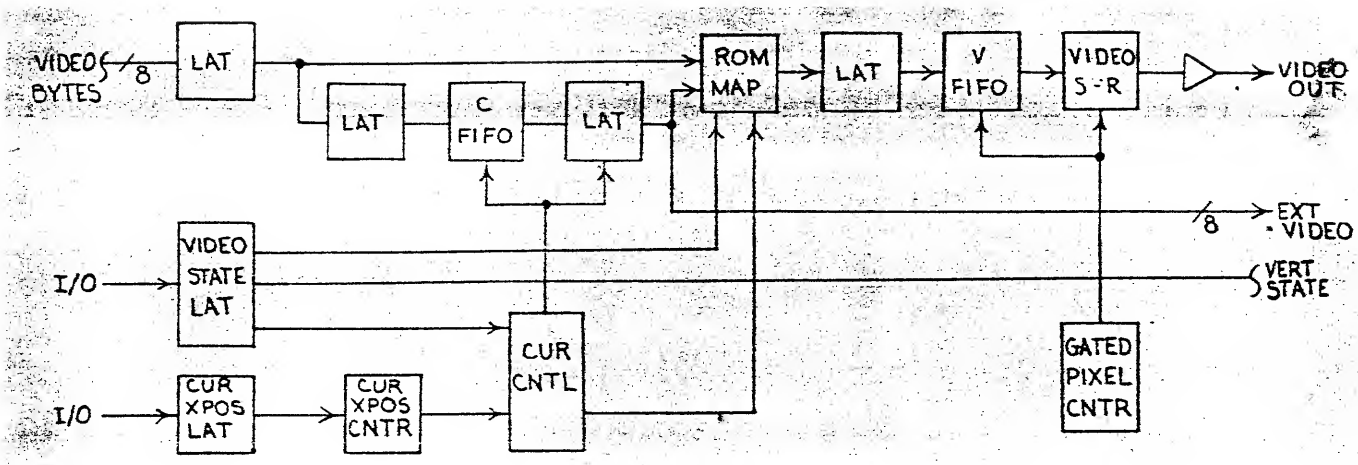
VIDEO BYTES
8
LAT
LAT
C FIFO
LAT
ROM MAP
LAT
V FIFO
VIDEO S-R
VIDEO OUT
8
EXT VIDEO
I/O
VIDEO STATE LAT
VERT STATE
CUR CNTL
I/O
CUR XPOS LAT
CUR XPOS CNTR
GATED PIXEL CNTR

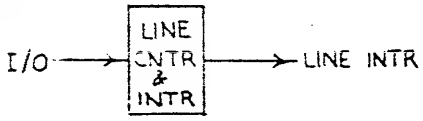
I/O
LINE CNTR & INTR
LINE INTR

SIGS
DIAG LAT
I/O

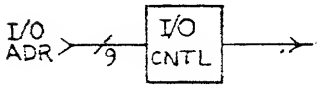
I/O ADR
9
I/O CNTL

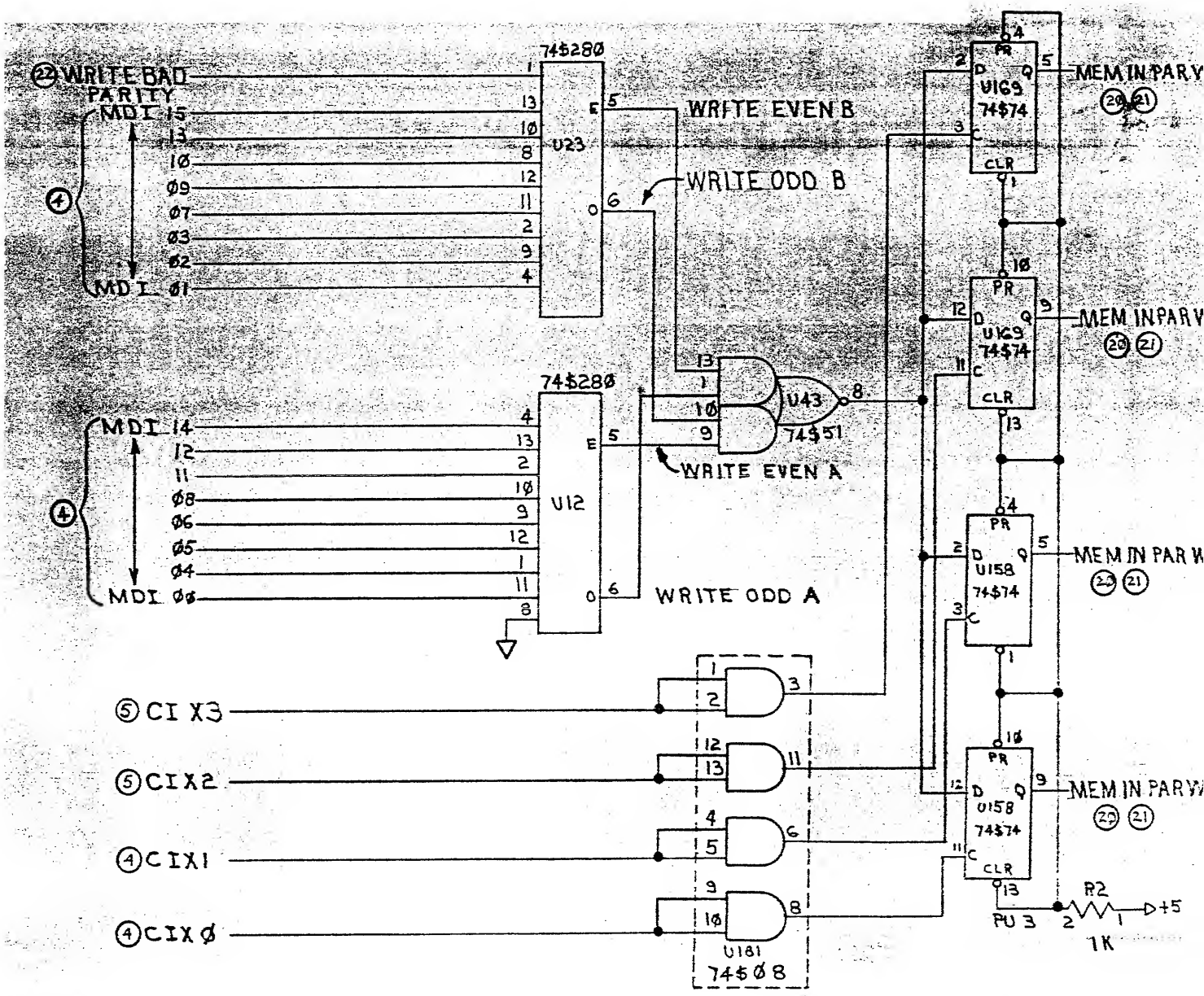

Three Rivers Computer		
DATA INPUT QUALITY		
		3 - 22

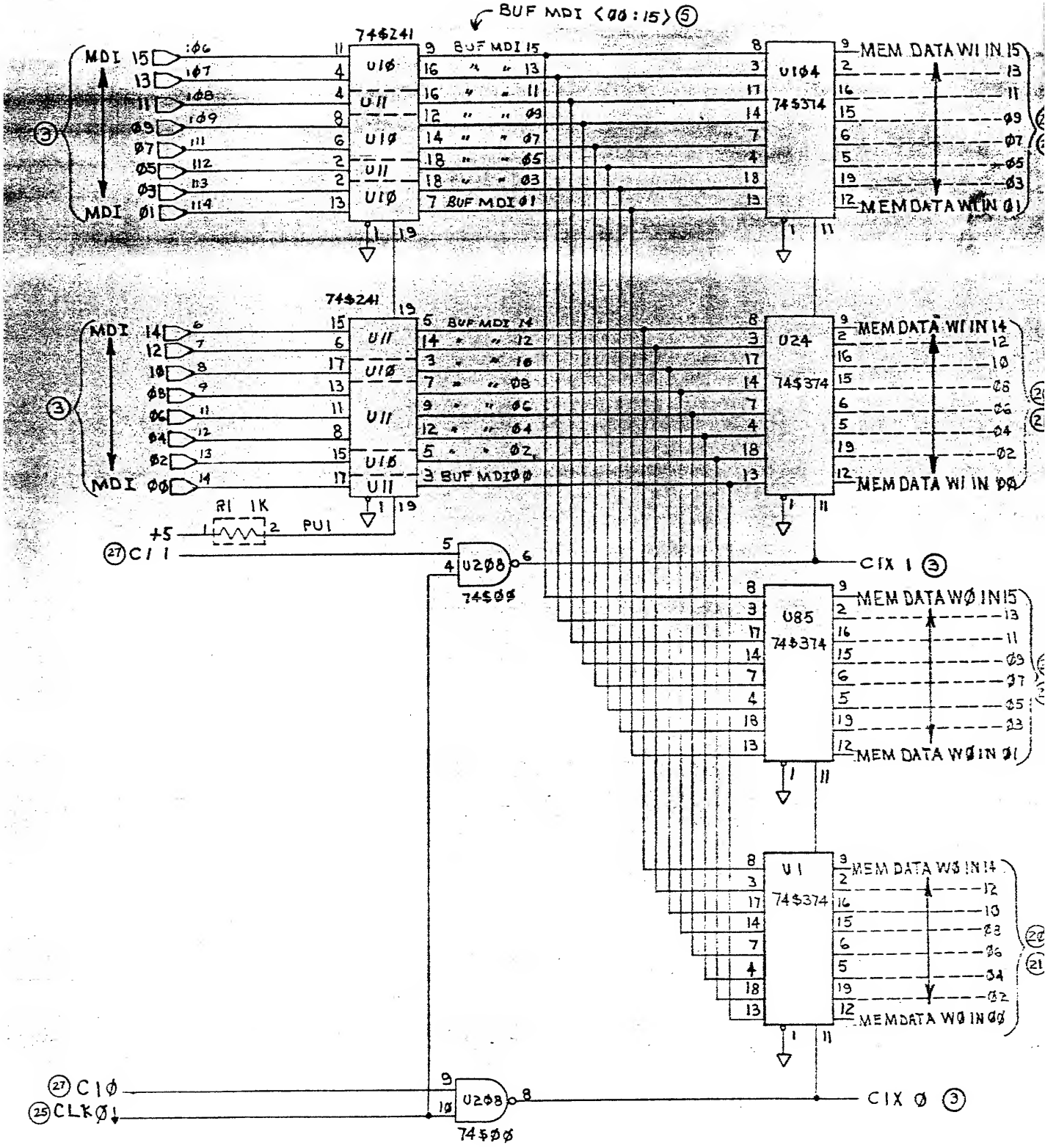

Three Rivers Computer	
DATA INPUT W1	
9-24-81	4-23

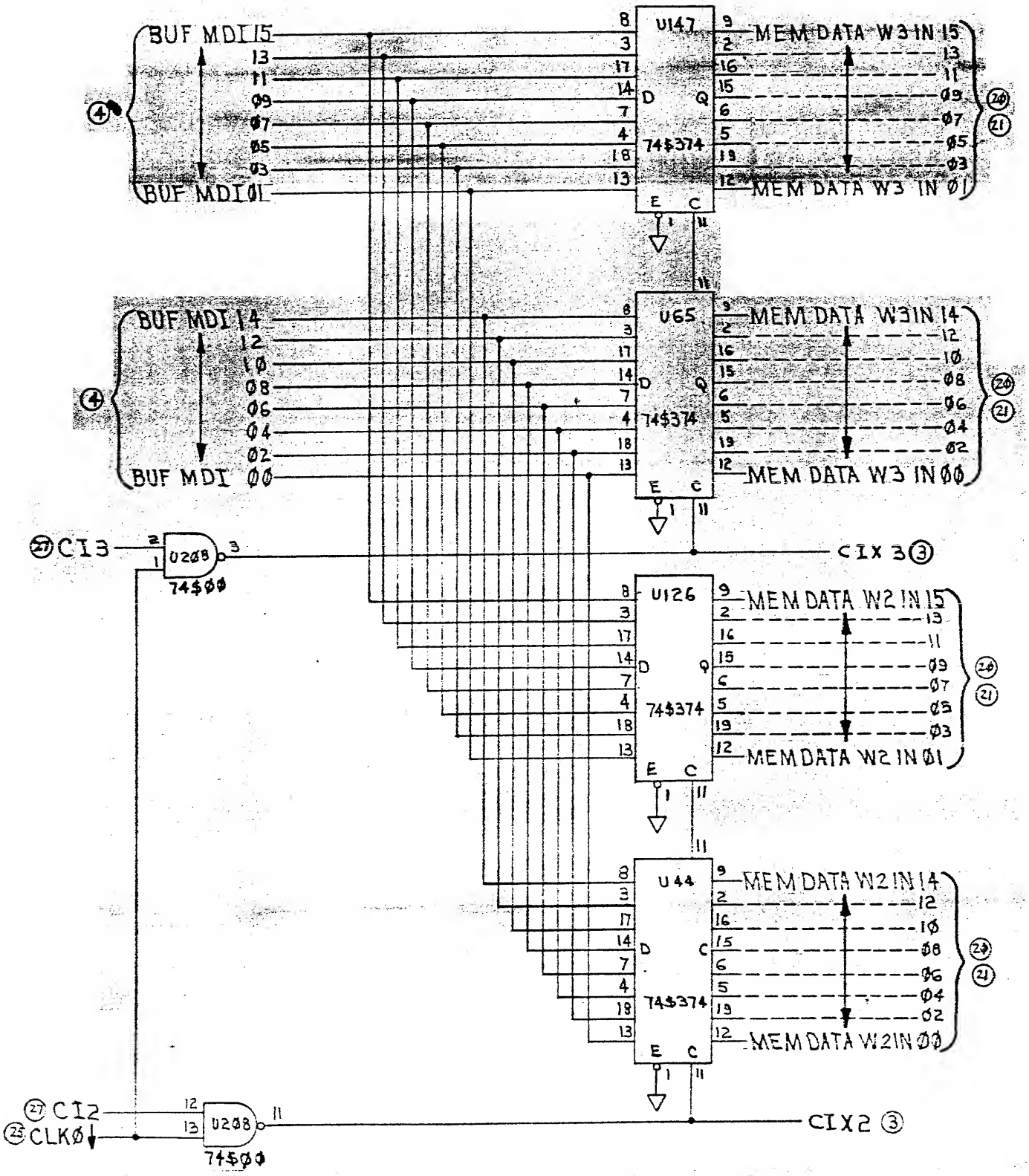
BUF MDI 15
BUF MDI 14
BUF MDI ØØ
BUF MDI ØL
U147
U65
U126
U44
74$374
MEM DATA W3 IN 15
MEM DATA W3 IN 14
MEM DATA W3 IN ØØ
MEM DATA W3 IN Ø1
MEM DATA W2 IN 15
MEM DATA W2 IN 14
MEM DATA W2 IN ØØ
MEM DATA W2 IN Ø1
U208
74$ØØ
CI3
CIX 3
CI2
CLKØ
CIX 2
Three Rivers Computer

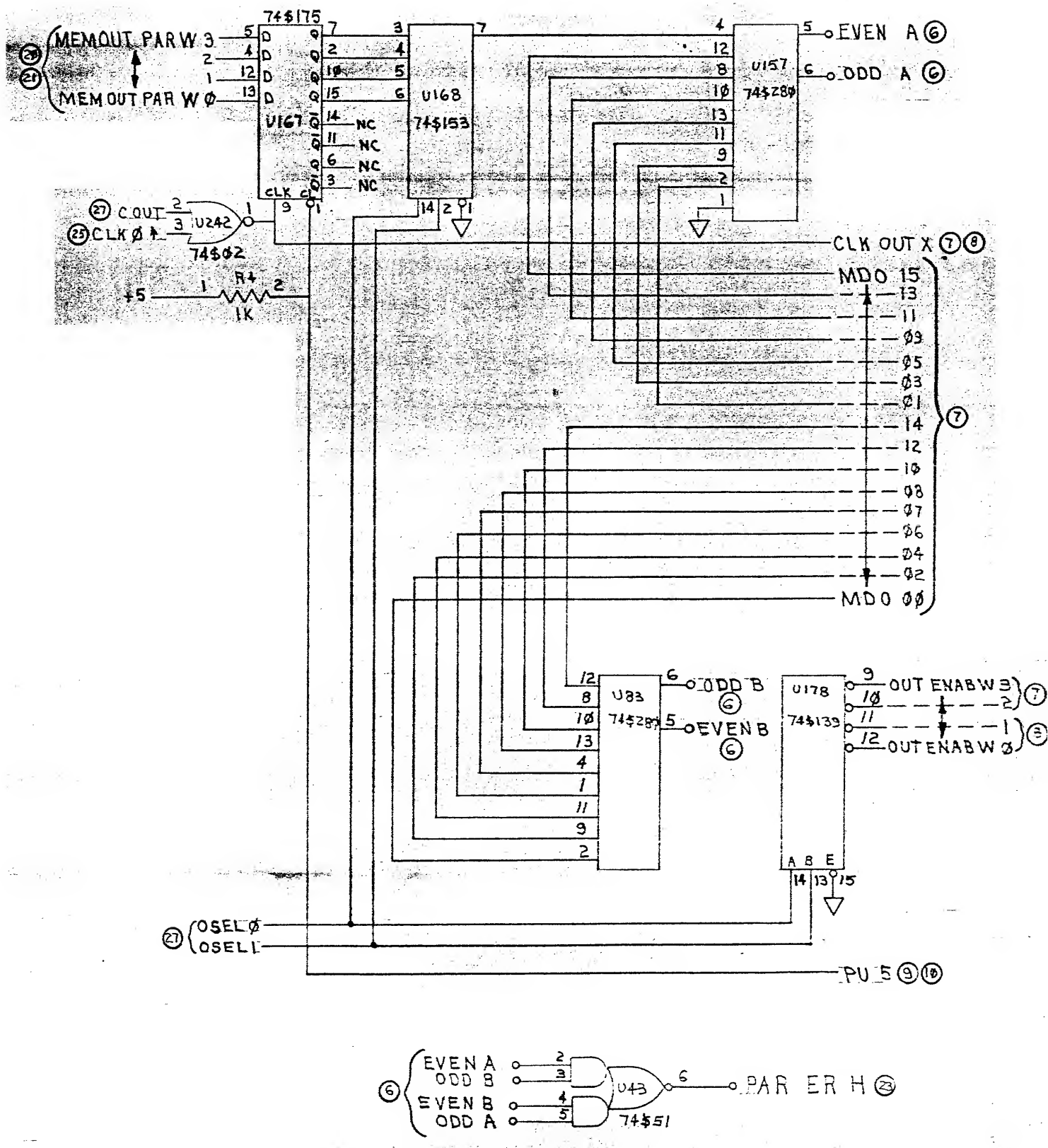

Three Rivers Computer	
DATA OUTPUT	

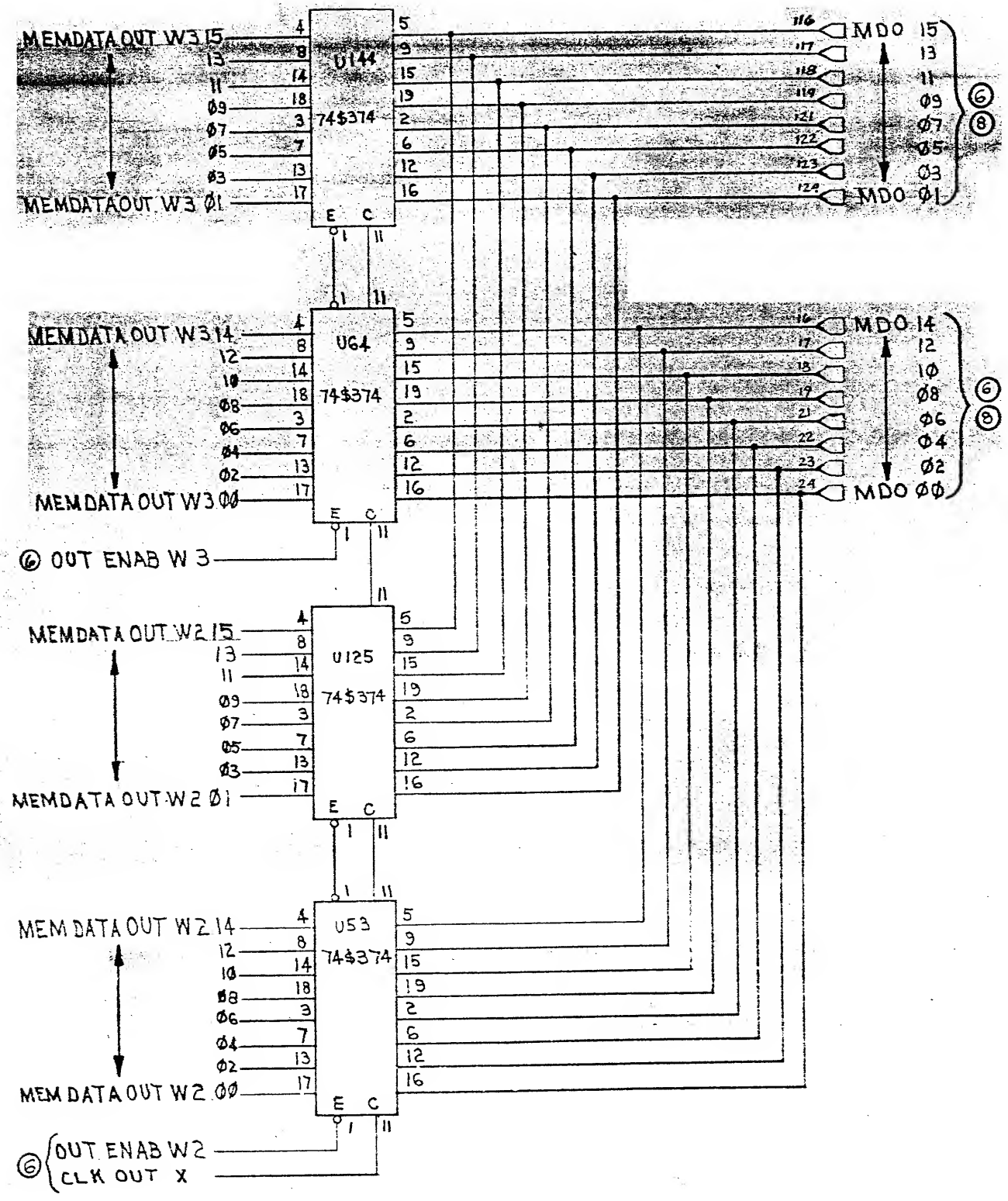

Three Rivers Computer	
DATA OUTPUT	
	7 - 28

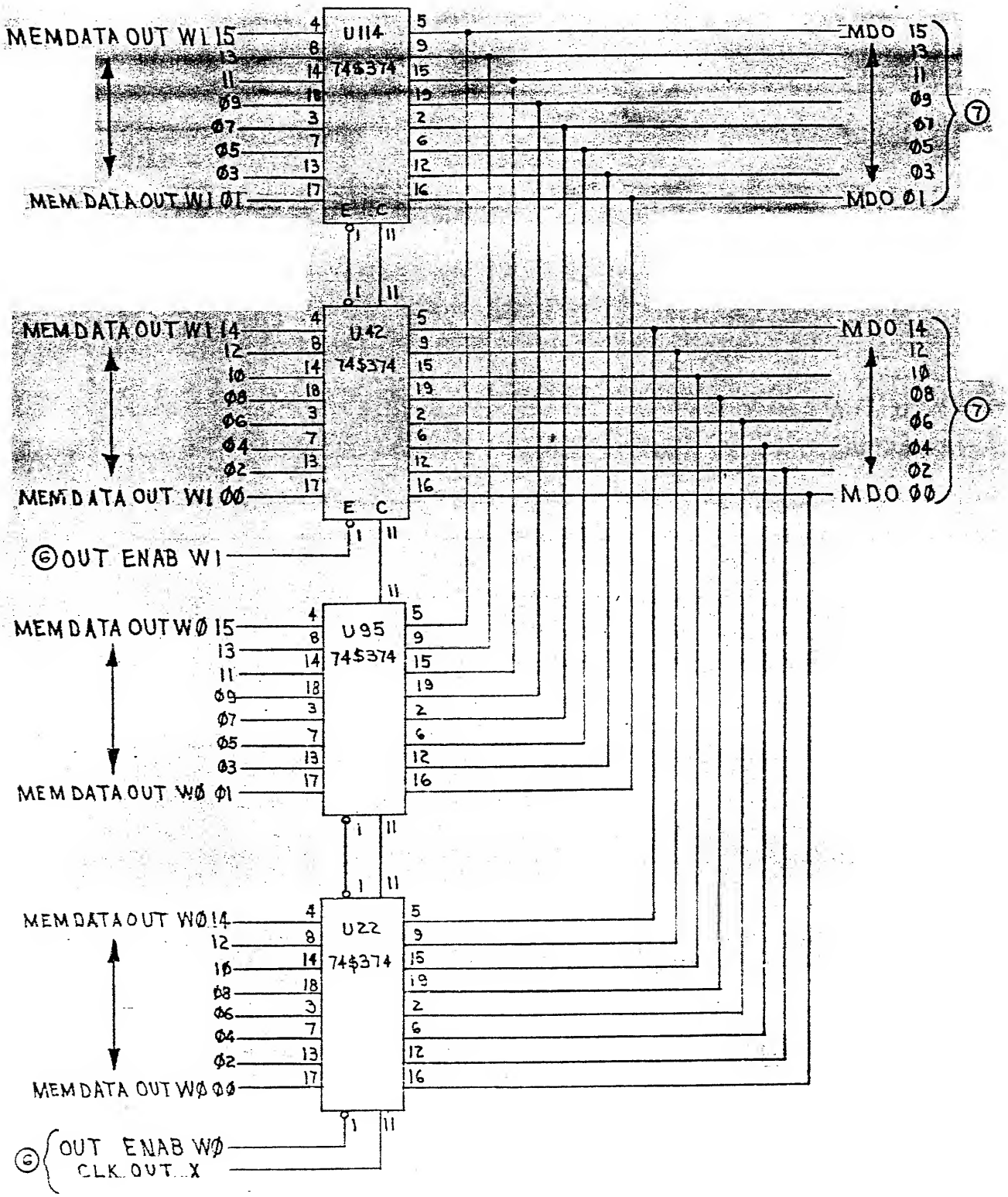

Three Rivers Computer		
DATA OUTPUT		MEG-001
T.J.T.	00179-9-A	8'-28

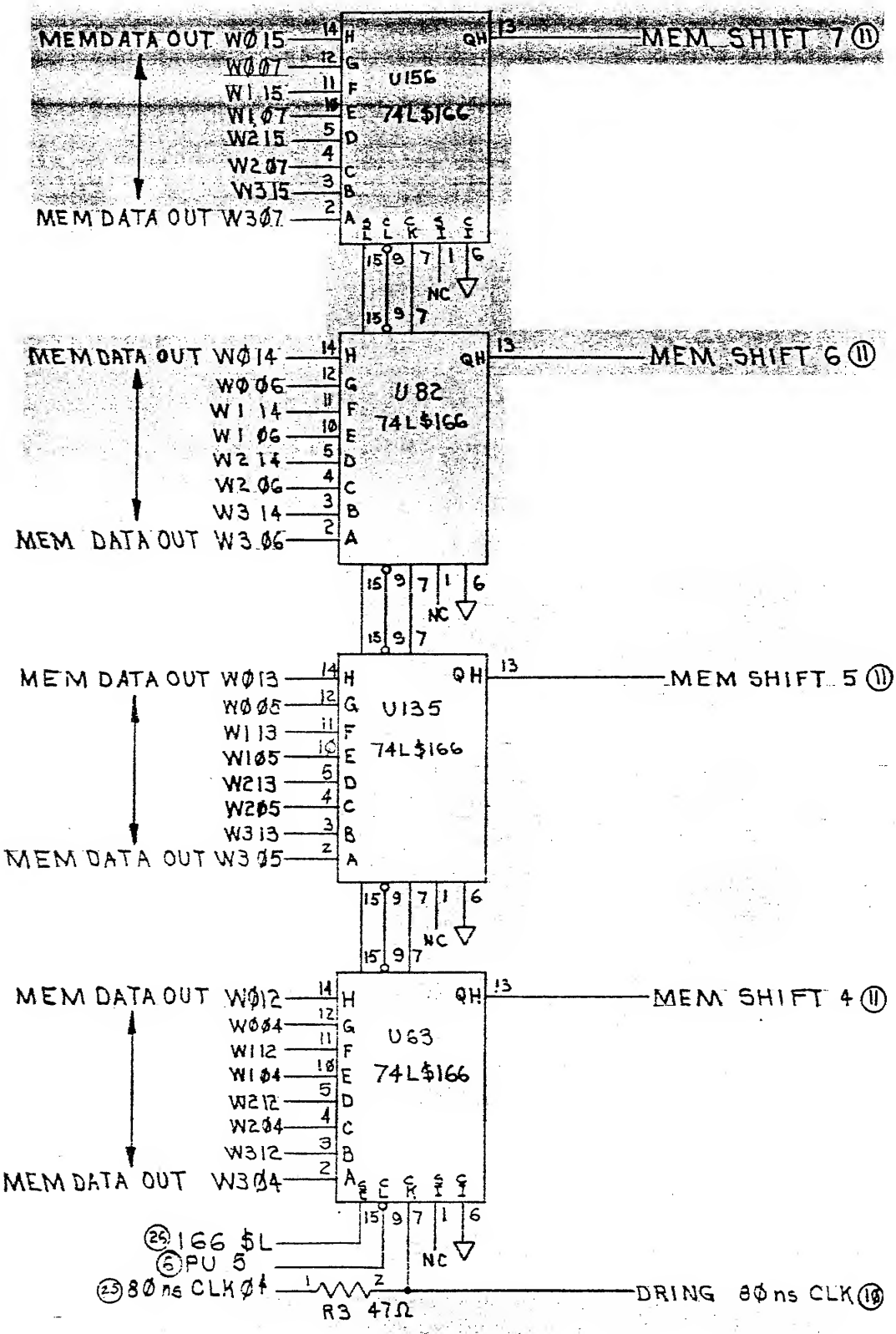
MEMDATA OUT W015
W007
W115
W107
W215
W207
W315
MEM DATA OUT W307
U156
74LS166
MEM SHIFT 7 (11)
MEM DATA OUT W014
W006
W114
W106
W214
W206
W314
MEM DATA OUT W306
U82
74LS166
MEM SHIFT 6 (11)
MEM DATA OUT W013
W005
W113
W105
W213
W205
W313
MEM DATA OUT W305
U135
74LS166
MEM SHIFT 5 (11)
MEM DATA OUT W012
W004
W112
W104
W212
W204
W312
MEM DATA OUT W304
U63
74LS166
MEM SHIFT 4 (11)
(25) 166 SL
(6) PU 5
(25) 80 ns CLK Ø1
R3 47Ω
DRING 80 ns CLK (10)
NC

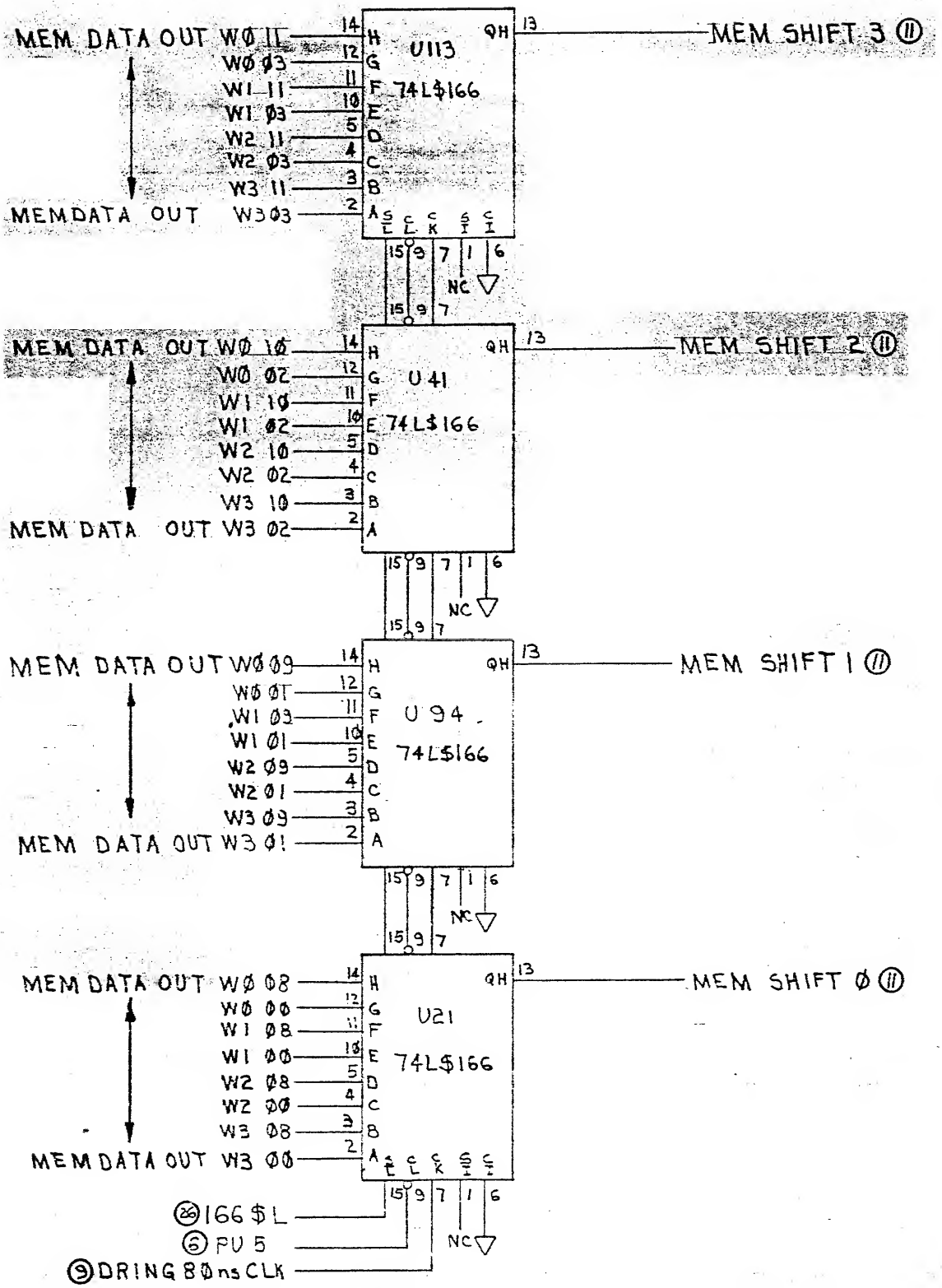
MEM DATA OUT W0 11
W0 03
W1 11
W1 03
W2 11
W2 03
W3 11
MEM DATA OUT W3 03
U113
74LS166
QH
MEM SHIFT 3 (11)
MEM DATA OUT W0 10
W0 02
W1 10
W1 02
W2 10
W2 02
W3 10
MEM DATA OUT W3 02
U41
74LS166
MEM SHIFT 2 (11)
MEM DATA OUT W0 09
W0 01
W1 09
W1 01
W2 09
W2 01
W3 09
MEM DATA OUT W3 01
U94
74LS166
MEM SHIFT 1 (11)
MEM DATA OUT W0 08
W0 00
W1 08
W1 00
W2 08
W2 00
W3 08
MEM DATA OUT W3 00
U21
74LS166
MEM SHIFT 0 (11)
(26) 166 $L
(6) PU 5
(9) DRING 80ns CLK
NC

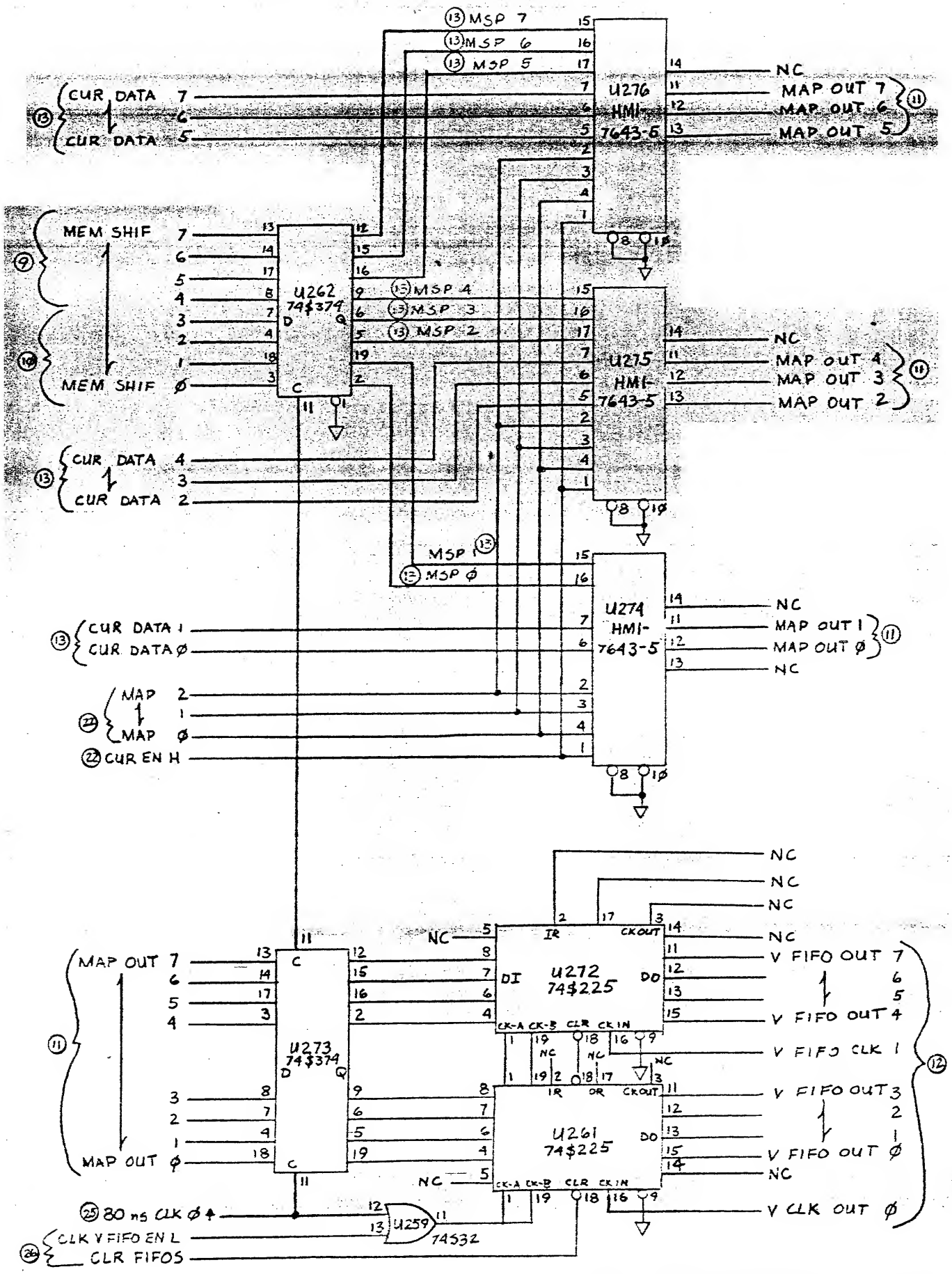
(13) MSP 7
(13) MSP 6
(13) MSP 5
CUR DATA 7
CUR DATA 6
CUR DATA 5
U276 HMI-7643-5
NC
MAP OUT 7
MAP OUT 6
MAP OUT 5
(11)
MEM SHIF 7
6
5
4
3
2
1
0
MEM SHIF 0
(9)
(10)
U262 74S374
(13) MSP 4
(13) MSP 3
(13) MSP 2
U275 HMI-7643-5
NC
MAP OUT 4
MAP OUT 3
MAP OUT 2
CUR DATA 4
CUR DATA 3
CUR DATA 2
(13) MSP 1
(13) MSP 0
U274 HMI-7643-5
CUR DATA 1
CUR DATA 0
NC
MAP OUT 1
MAP OUT 0
NC
MAP 2
MAP 1
MAP 0
(22) CUR EN H
MAP OUT 7
6
5
4
3
2
1
MAP OUT 0
U273 74S374
NC
U272 74S225
U261 74S225
V FIFO OUT 7
6
5
V FIFO OUT 4
V FIFO CLK 1
V FIFO OUT 3
2
1
V FIFO OUT 0
NC
V CLK OUT 0
(12)
(25) 80 ns CLK 0
U259 74S32
(26) CLK V FIFO EN L
CLR FIFOS
Three Rivers Computer
VIDEO OUTPUT
MEC-201

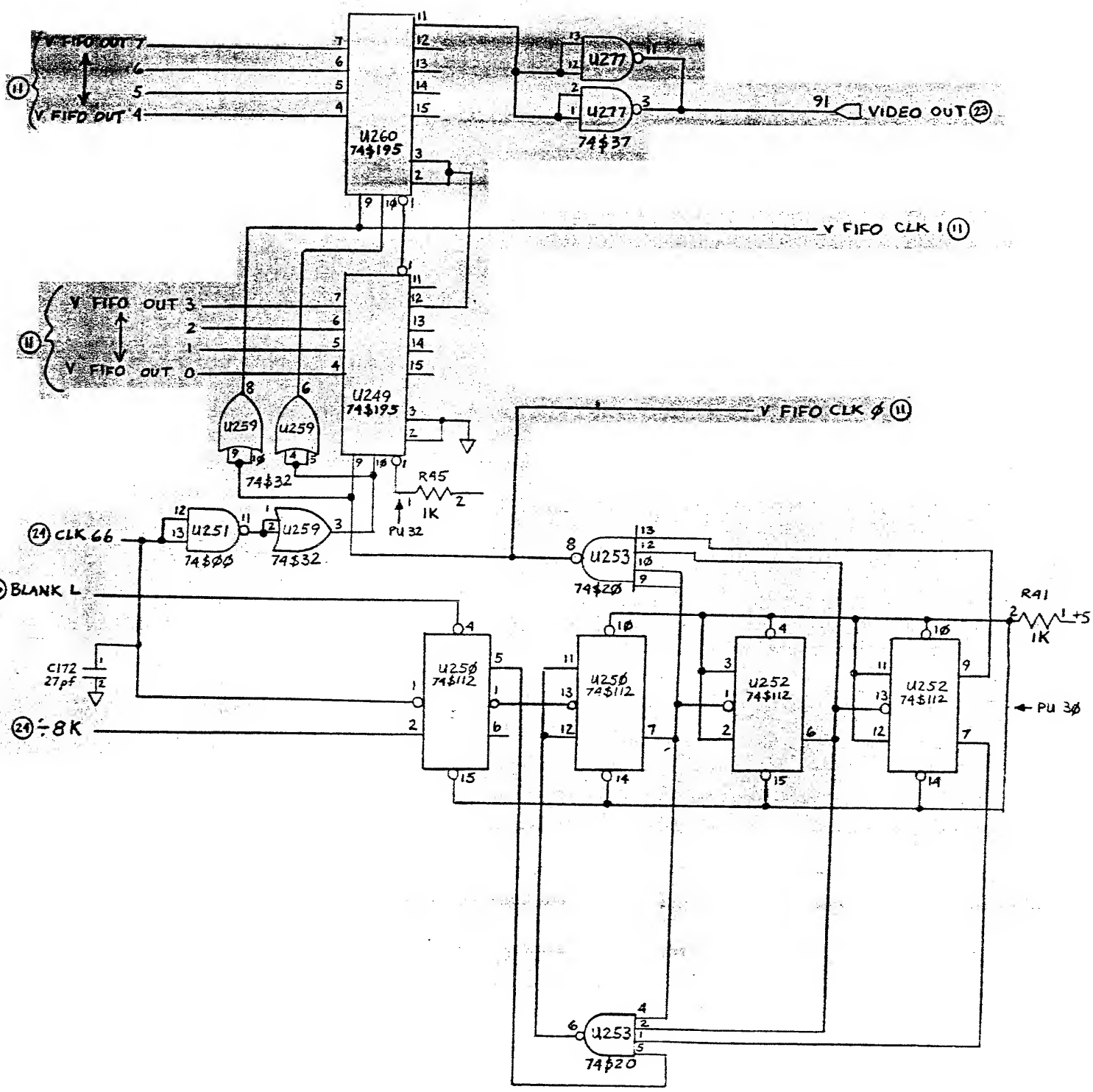

Three Rivers Computer	
VIDEO OUTPUT	

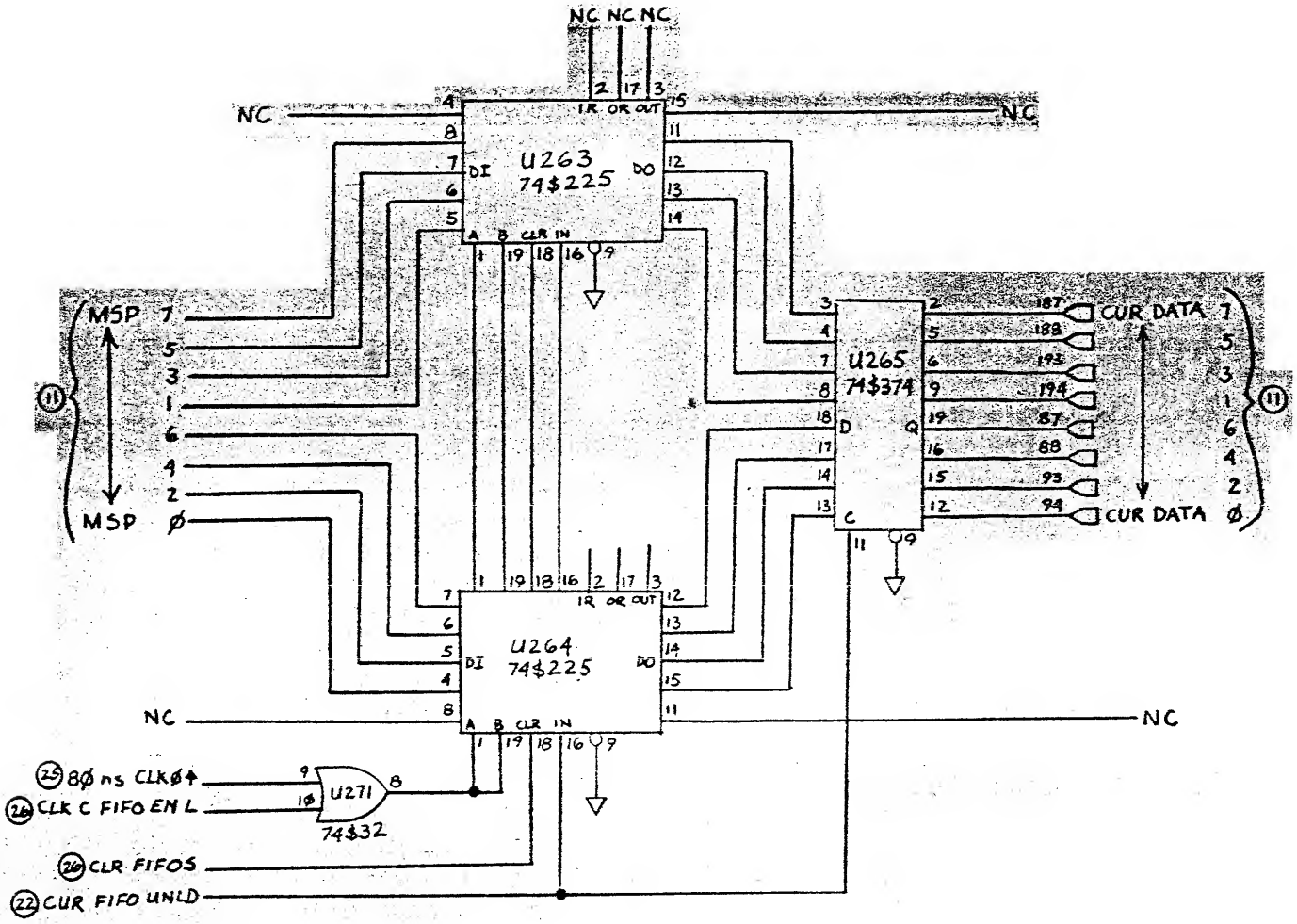

Three Rivers Computer

VIDEO OUTPUT

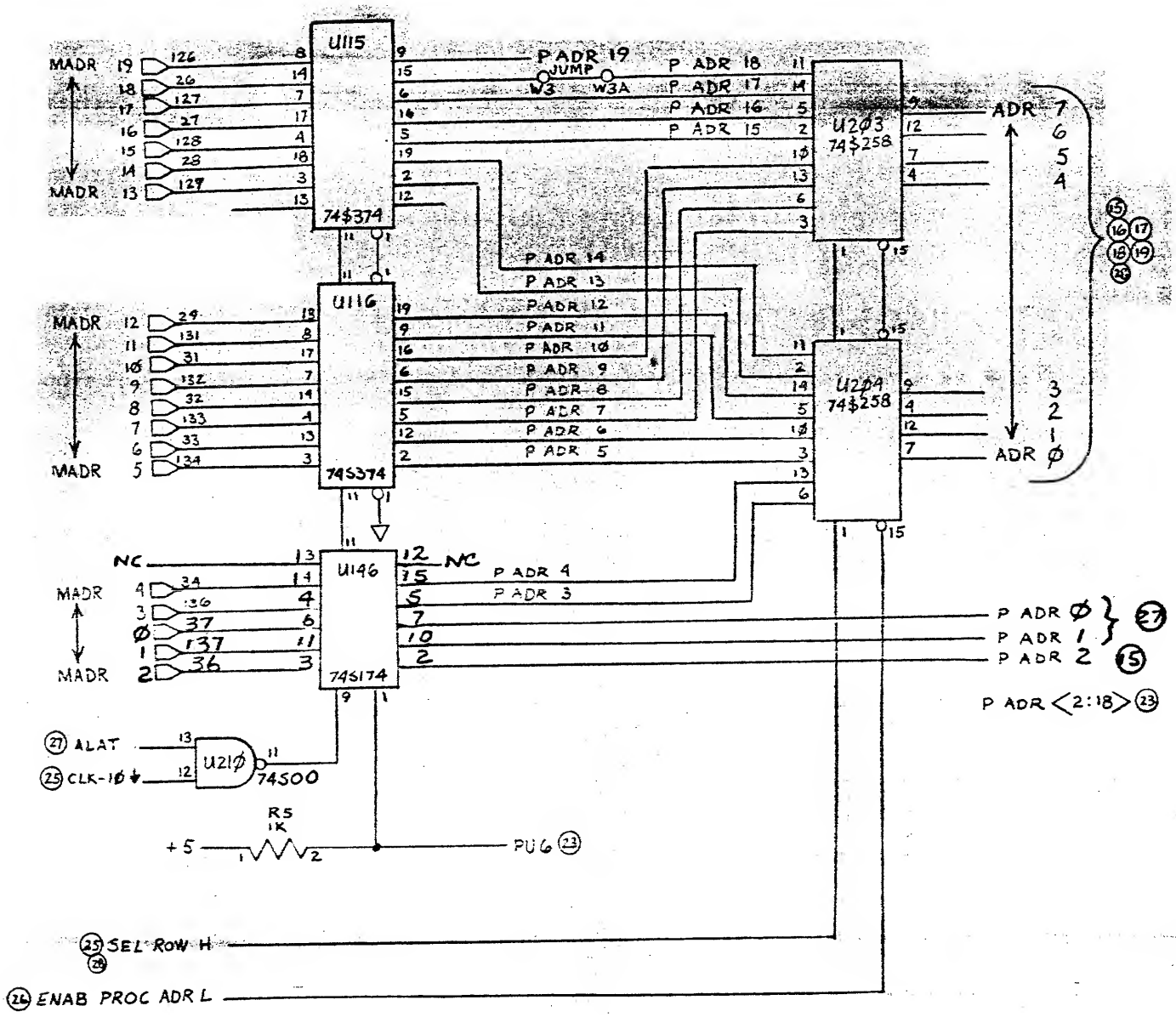
U115
74S374
U116
74S374
U146
74S174
U203
74S258
U204
74S258
U210
74S00
MADR 19
MADR 18
MADR 17
MADR 16
MADR 15
MADR 14
MADR 13
MADR 12
MADR 11
MADR 10
MADR 9
MADR 8
MADR 7
MADR 6
MADR 5
MADR 4
MADR 3
MADR 0
MADR 1
MADR 2
P ADR 19
JUMP
W3
W3A
P ADR 18
P ADR 17
P ADR 16
P ADR 15
P ADR 14
P ADR 13
P ADR 12
P ADR 11
P ADR 10
P ADR 9
P ADR 8
P ADR 7
P ADR 6
P ADR 5
P ADR 4
P ADR 3
ADR 7
ADR 6
ADR 5
ADR 4
ADR 3
ADR 2
ADR 1
ADR 0
NC
NC
(27) ALAT
(25) CLK-10
R5
1K
+5
PU6 (23)
(25) SEL ROW H
(26) ENAB PROC ADR L
P ADR 0
P ADR 1
P ADR 2
(27)
(15)
P ADR <2:18> (23)

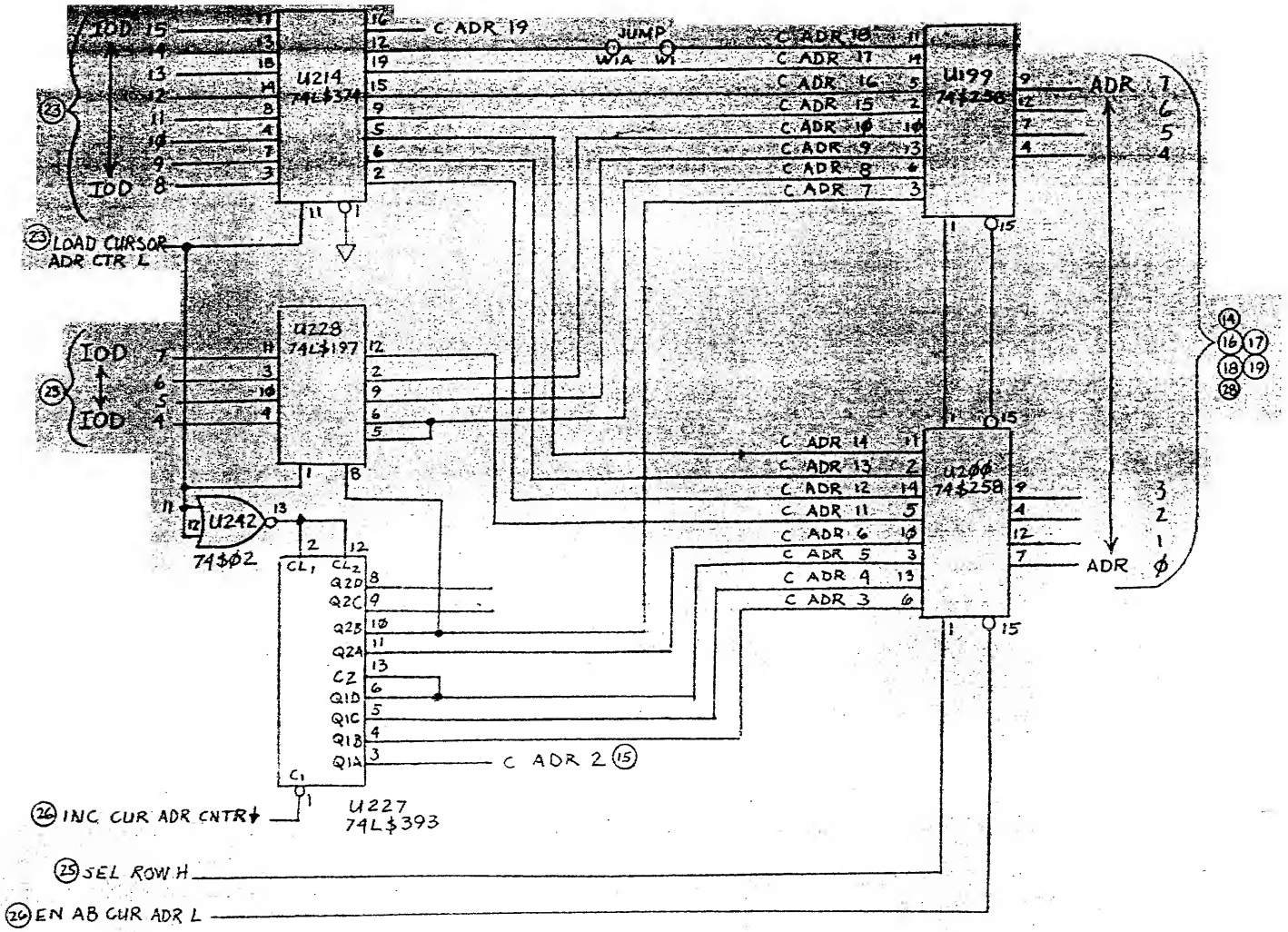
IOD 15
IOD 8
U214
74L$374
C ADR 19
JUMP
W1A W1
C ADR 18
C ADR 17
C ADR 16
C ADR 15
C ADR 10
C ADR 9
C ADR 8
C ADR 7
U199
74$258
ADR 7 6 5 4
LOAD CURSOR ADR CTR L
U228
74L$197
IOD 7 6 5 4
IOD
U242
74$02
C ADR 14
C ADR 13
C ADR 12
C ADR 11
C ADR 6
C ADR 5
C ADR 4
C ADR 3
U200
74$258
ADR 3 2 1 Ø
CL1 CL2
Q2D Q2C Q2B Q2A
CZ
Q1D Q1C Q1B Q1A
C ADR 2
C1
INC CUR ADR CNTR
U227
74L$393
SEL ROW H
EN AB CUR ADR L

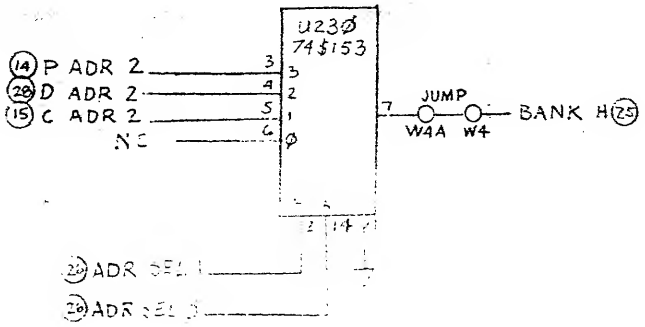
U230
74$153
P ADR 2
D ADR 2
C ADR 2
NC
JUMP
W4A W4
BANK H
ADR SEL 1
ADR SEL 0

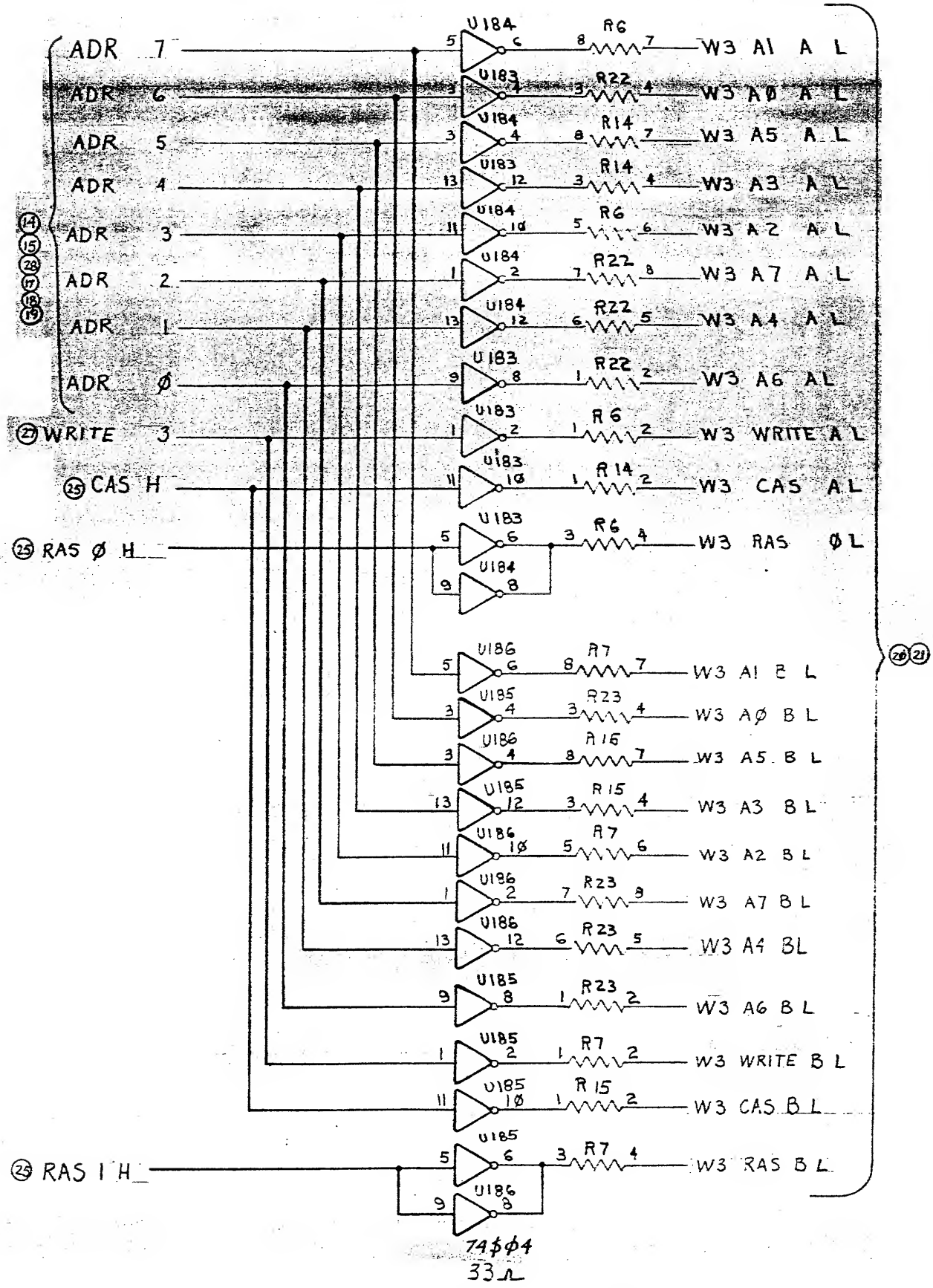
ADR 7
ADR 6
ADR 5
ADR 4
ADR 3
ADR 2
ADR 1
ADR Ø
WRITE 3
CAS H
RAS Ø H
RAS 1 H
U184
U183
U184
U183
U184
U184
U184
U183
U183
U183
U183
U186
U185
U186
U185
U186
U186
U185
U185
U185
U186
R6
R22
R14
R14
R6
R22
R22
R6
R6
R14
R6
R7
R23
R16
R15
R7
R23
R23
R23
R7
R15
R7
W3 A1 A L
W3 AØ A L
W3 A5 A L
W3 A3 A L
W3 A2 A L
W3 A7 A L
W3 A4 A L
W3 A6 A L
W3 WRITE A L
W3 CAS A L
W3 RAS ØL
W3 A1 B L
W3 AØ B L
W3 A5 B L
W3 A3 B L
W3 A2 B L
W3 A7 B L
W3 A4 BL
W3 A6 B L
W3 WRITE B L
W3 CAS B L
W3 RAS B L
74ϕ04
33Ω

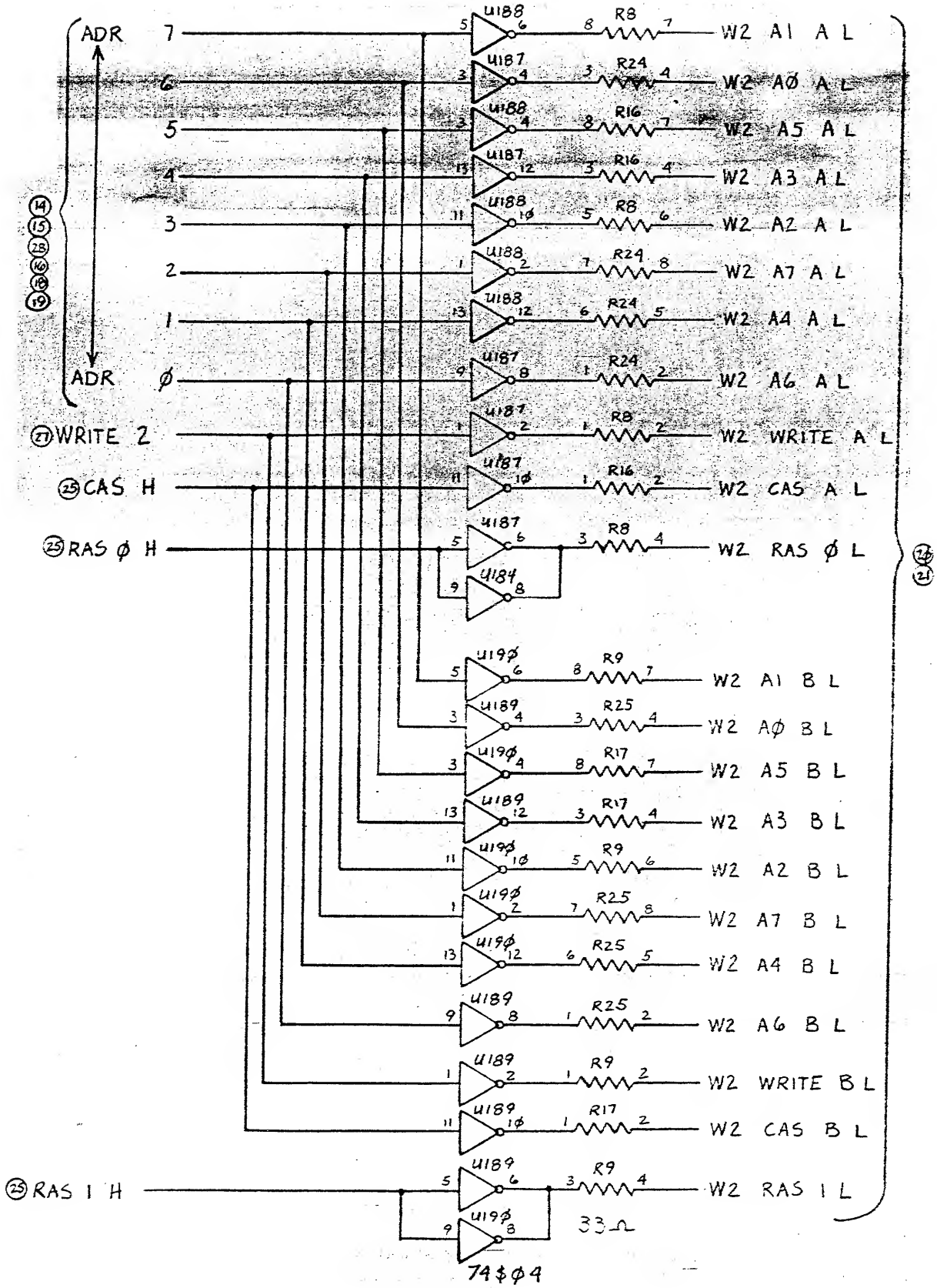
ADR
7
6
5
4
3
2
1
ADR
Ø
(14)(15)(28)(16)(18)(19)
(27) WRITE 2
(25) CAS H
(25) RAS Ø H
(25) RAS 1 H
U188
U187
U189
U184
R8
R16
R24
R9
R17
R25
W2 A1 A L
W2 AØ A L
W2 A5 A L
W2 A3 A L
W2 A2 A L
W2 A7 A L
W2 A4 A L
W2 A6 A L
W2 WRITE A L
W2 CAS A L
W2 RAS Ø L
W2 A1 B L
W2 AØ B L
W2 A5 B L
W2 A3 B L
W2 A2 B L
W2 A7 B L
W2 A4 B L
W2 A6 B L
W2 WRITE B L
W2 CAS B L
W2 RAS 1 L
(24)(21)
33Ω
74S04

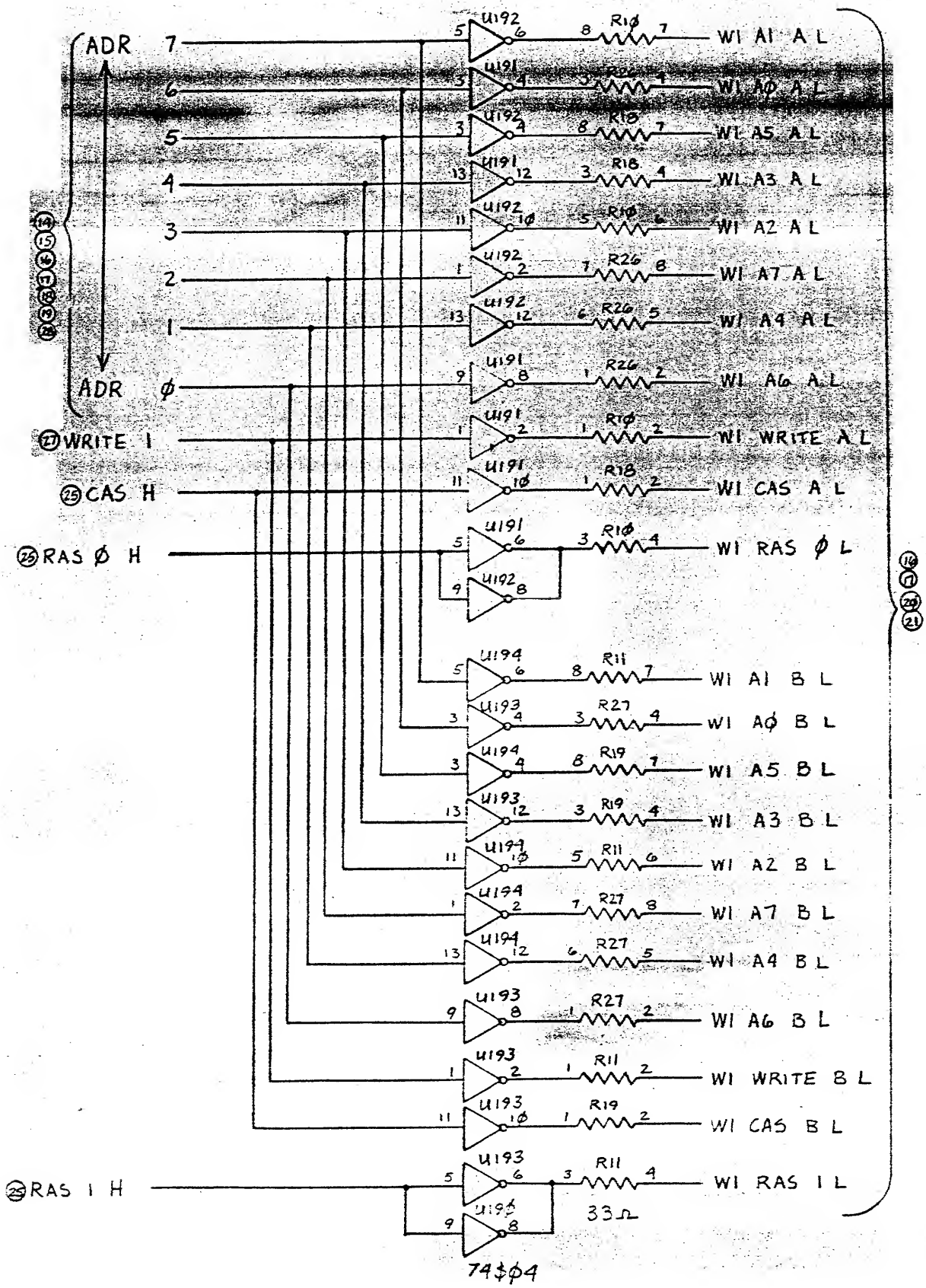
ADR 7
6
5
4
3
2
1
ADR Ø
WRITE I
CAS H
RAS Ø H
RAS 1 H
WI A1 A L
WI AØ A L
WI A5 A L
WI A3 A L
WI A2 A L
WI A7 A L
WI A4 A L
WI A6 A L
WI WRITE A L
WI CAS A L
WI RAS Ø L
WI A1 B L
WI AØ B L
WI A5 B L
WI A3 B L
WI A2 B L
WI A7 B L
WI A4 B L
WI A6 B L
WI WRITE B L
WI CAS B L
WI RAS 1 L
33Ω
74SØ4

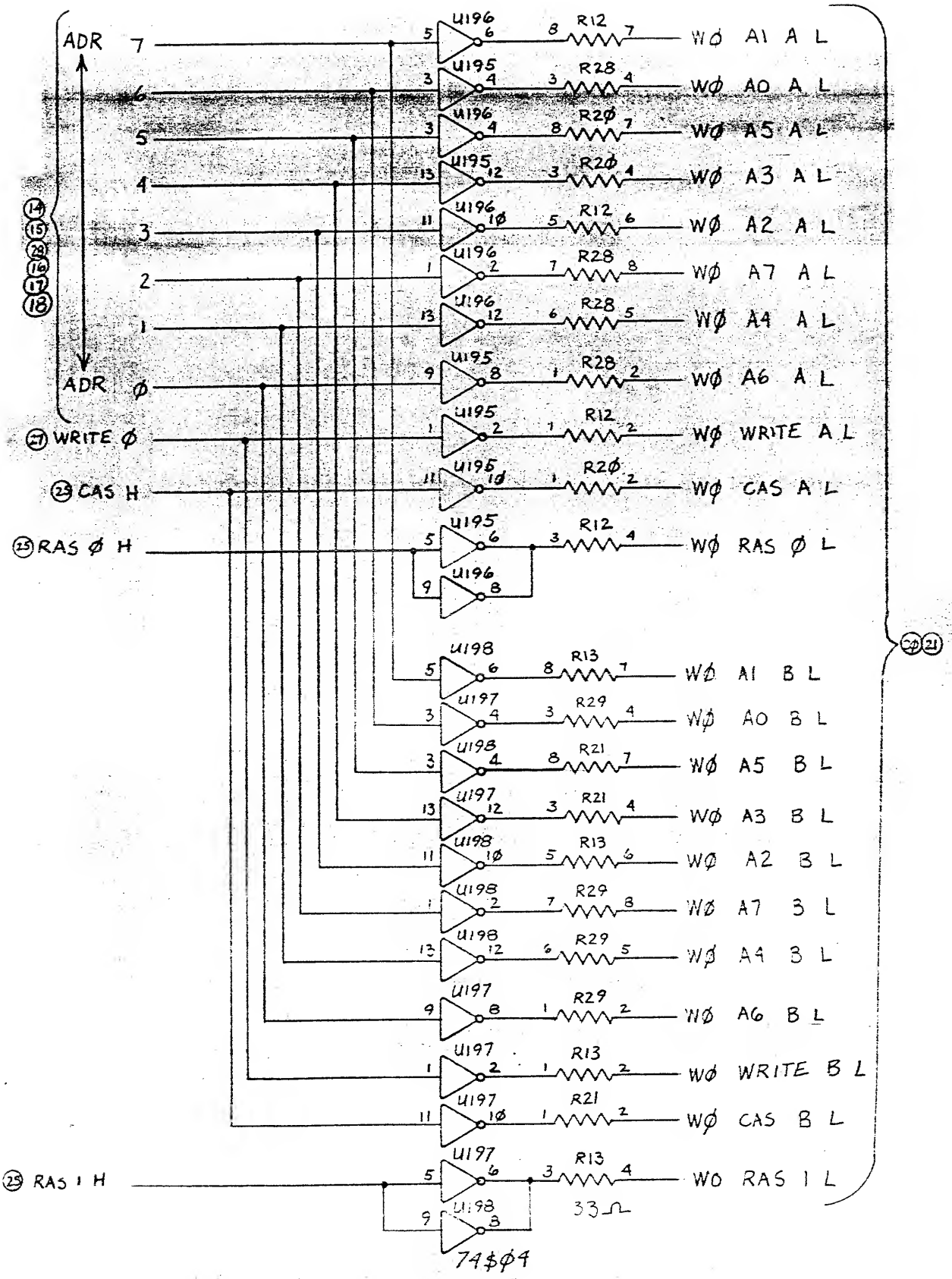
ADR 7
6
5
4
3
2
1
ADR Ø
(14) (15) (28) (16) (17) (18)
(27) WRITE Ø
(23) CAS H
(25) RAS Ø H
(25) RAS 1 H
U196
U195
U198
U197
R12
R28
R2Ø
R2Ø
R12
R28
R28
R28
R12
R2Ø
R12
R13
R29
R21
R21
R13
R29
R29
R29
R13
R21
R13
WØ A1 A L
WØ AO A L
WØ A5 A L
WØ A3 A L
WØ A2 A L
WØ A7 A L
WØ A4 A L
WØ A6 A L
WØ WRITE A L
WØ CAS A L
WØ RAS Ø L
WØ A1 B L
WØ AO B L
WØ A5 B L
WØ A3 B L
WØ A2 B L
WØ A7 B L
WØ A4 B L
WØ A6 B L
WØ WRITE B L
WØ CAS B L
WO RAS 1 L
33Ω
74$Ø4
(20) (21)

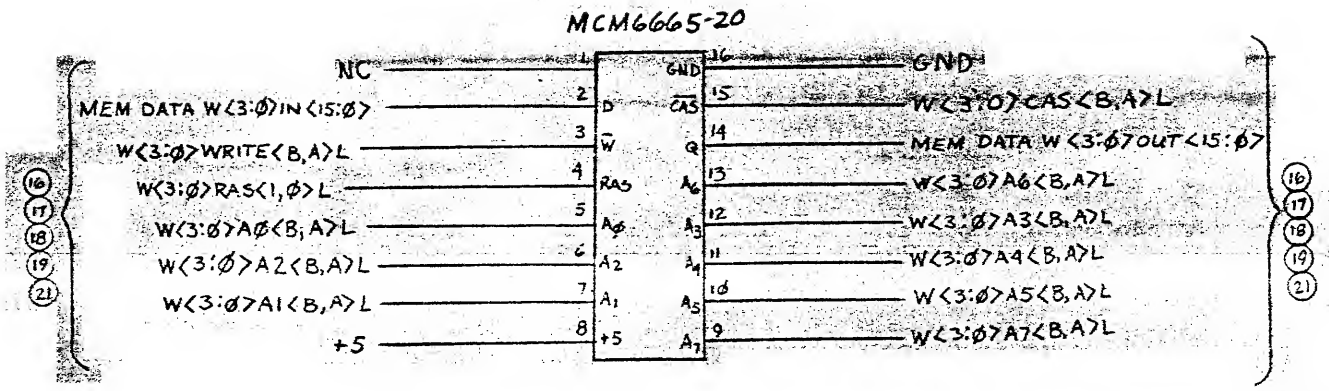

NOTE: I C TYPICAL 136 LOCATIONS ON RAM ARRAY PAGE (21)

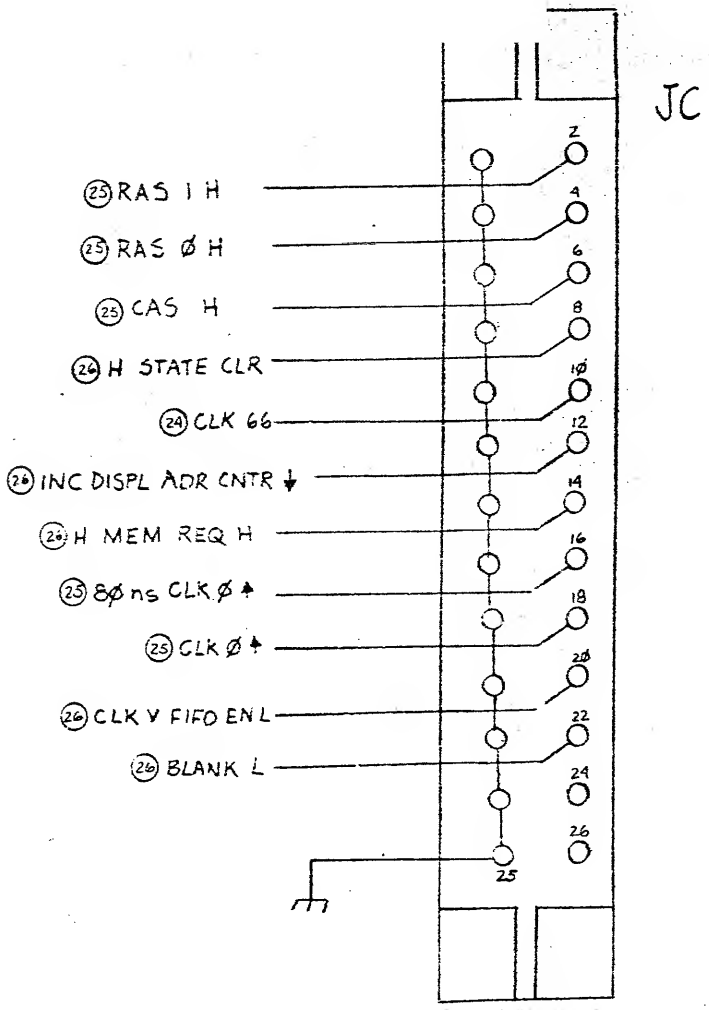

Three Rivers Computer

REVISIONS			
LTR		DATE	APPV'D

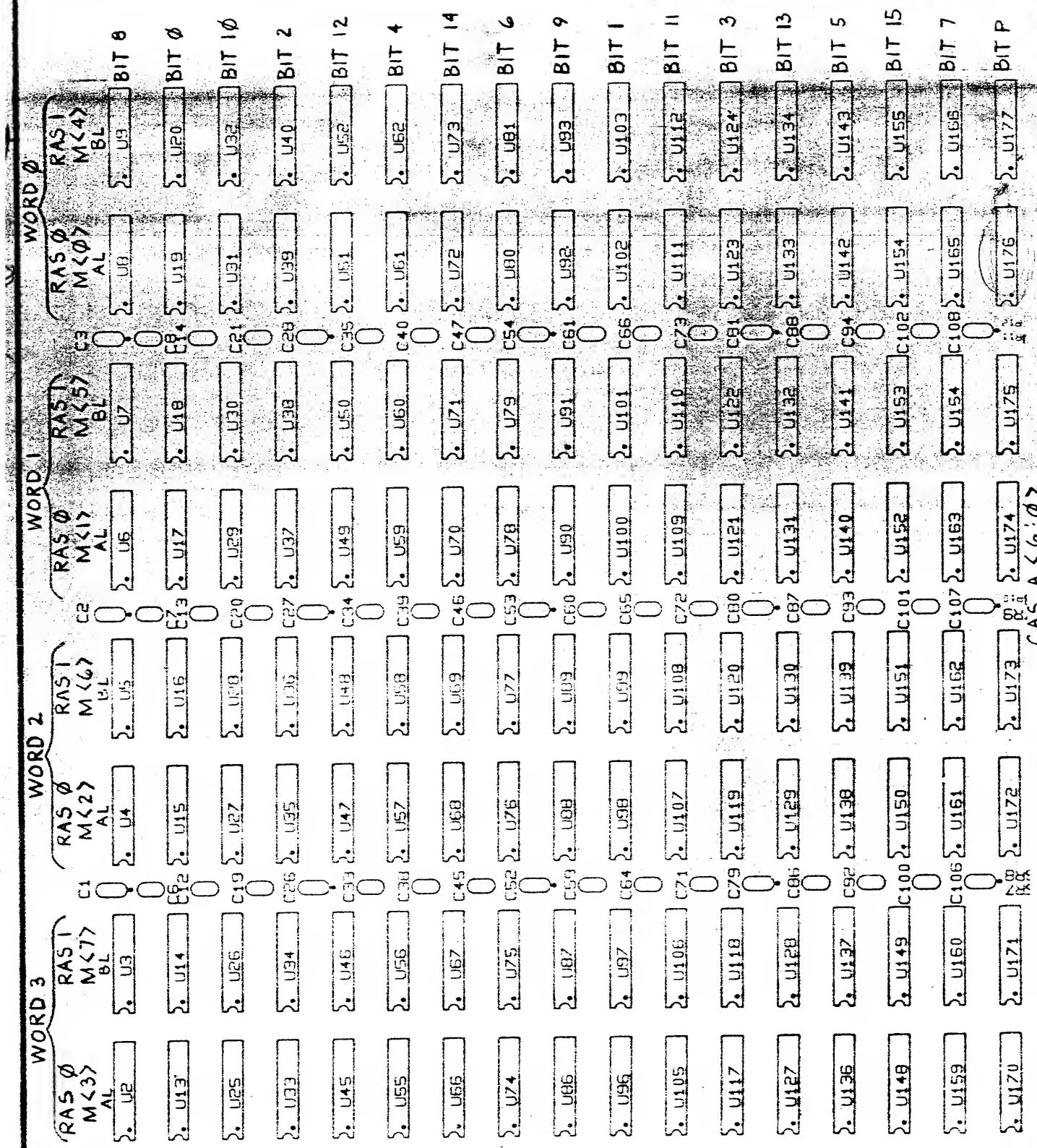

RAS 0 = BANK 0 BANK = M[2]
RAS 1 = BANK 1

NEXT ASSY MEG-ØØ1

THIS DOCUMENT IS NOT TO BE REPRODUCED IN ANY FORM, OR TRANSITTED IN WHOLE OR IN PART, WITHOUT PRIOR WRITTEN AUTHORIZATION OF Three Rivers Computer.

TITLE MEG RAM ARRAY

Three Rivers Computer

DRAWN	DIV	11-18-81	SIZE	CODE	IDENTIFICATION	VAR	REV
CHECKED			A	SC	00179	21	A

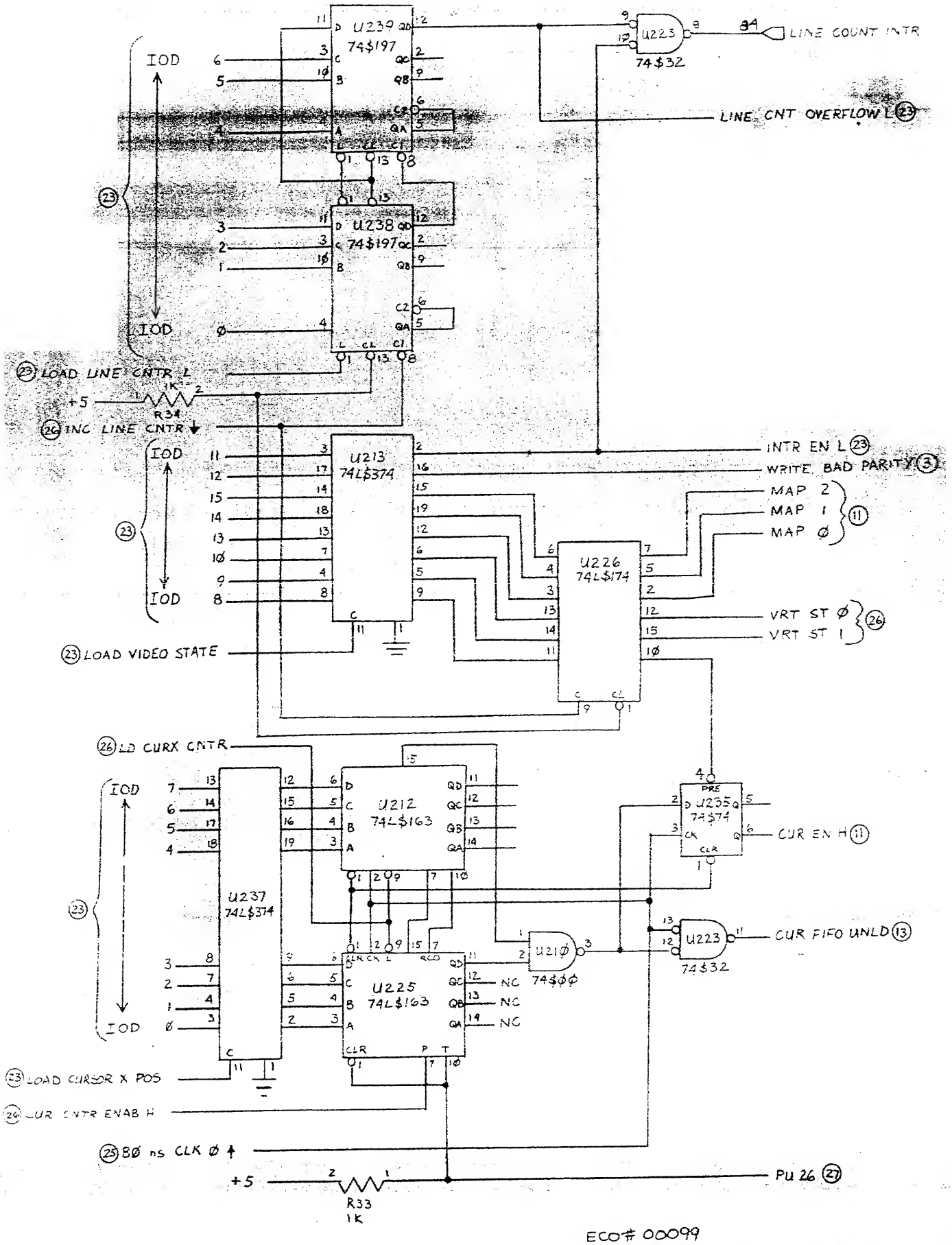

ECO# 00099

Three Rivers Computer

I/O REGISTERS | MEG-001

SC-A-00179-22A | 22 - 23

22

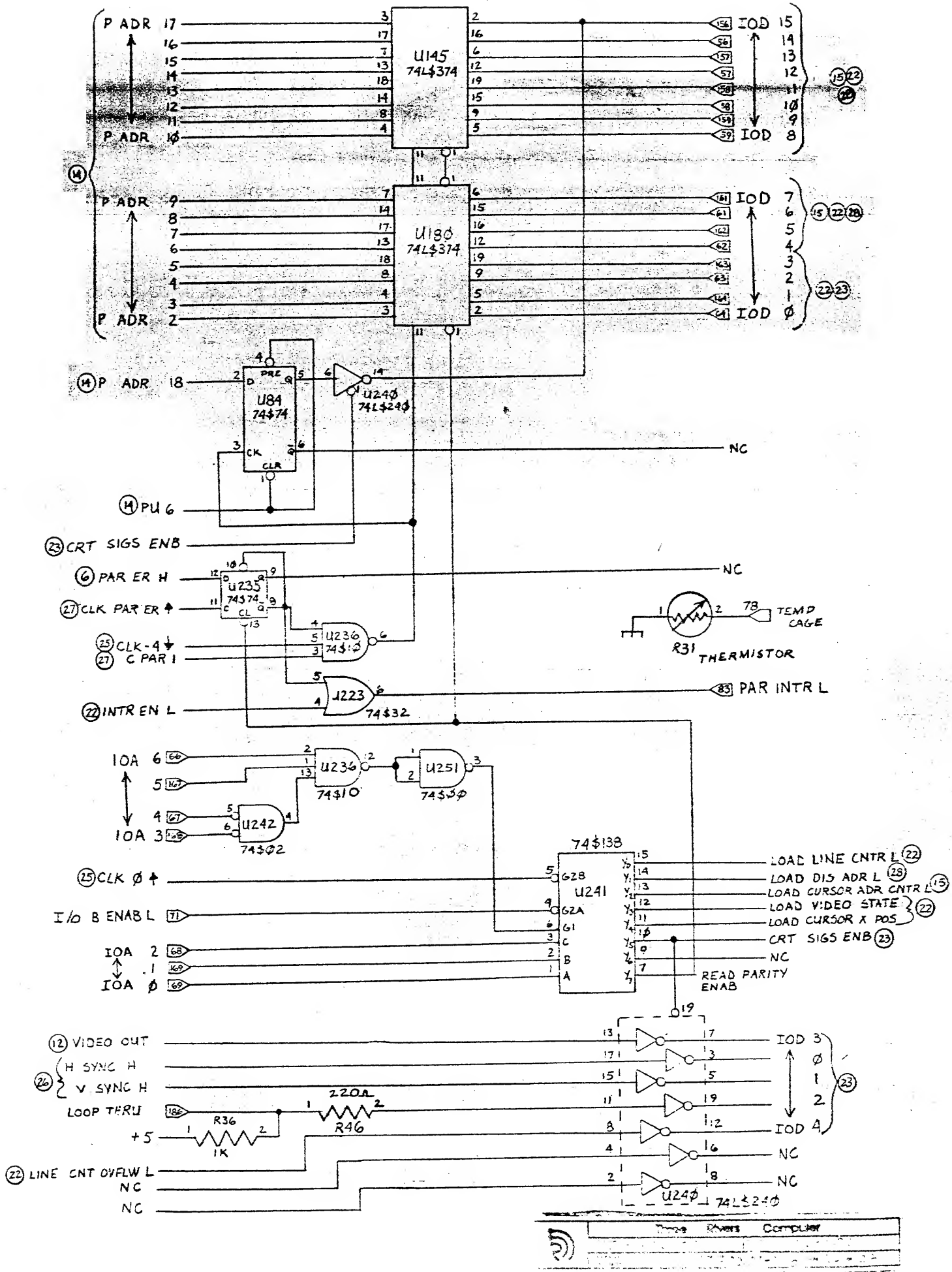
P ADR 17
P ADR 16
P ADR 15
P ADR 14
P ADR 13
P ADR 12
P ADR 11
P ADR 10
U145
74LS374
IOD 15
IOD 14
IOD 13
IOD 12
IOD 11
IOD 10
IOD 9
IOD 8
P ADR 9
P ADR 8
P ADR 7
P ADR 6
P ADR 5
P ADR 4
P ADR 3
P ADR 2
U180
74LS374
IOD 7
IOD 6
IOD 5
IOD 4
IOD 3
IOD 2
IOD 1
IOD 0
P ADR 18
U84
74S74
PRE
CLR
U240
74LS240
NC
PU 6
CRT SIGS ENB
PAR ER H
U235
74S74
CLK PAR ER
CLK-4
C PAR 1
U236
74S10
U223
74S32
INTR EN L
PAR INTR L
TEMP CAGE
R31 THERMISTOR
IOA 6
IOA 5
IOA 4
IOA 3
U236
74S10
U251
74S30
U242
74S02
74S138
U241
CLK Ø
I/O B ENAB L
IOA 2
IOA 1
IOA Ø
LOAD LINE CNTR L
LOAD DIS ADR L
LOAD CURSOR ADR CNTR L
LOAD VIDEO STATE
LOAD CURSOR X POS
CRT SIGS ENB
NC
READ PARITY ENAB
VIDEO OUT
H SYNC H
V SYNC H
LOOP THRU
+5
R36
1K
220Ω
R46
LINE CNT OVFLW L
NC
NC
IOD 3
IOD 2
IOD 1
IOD Ø
IOD 4
NC
NC
U240
74LS240

B= ECO NO. 00033 DIV 12/5/81 [illegible]

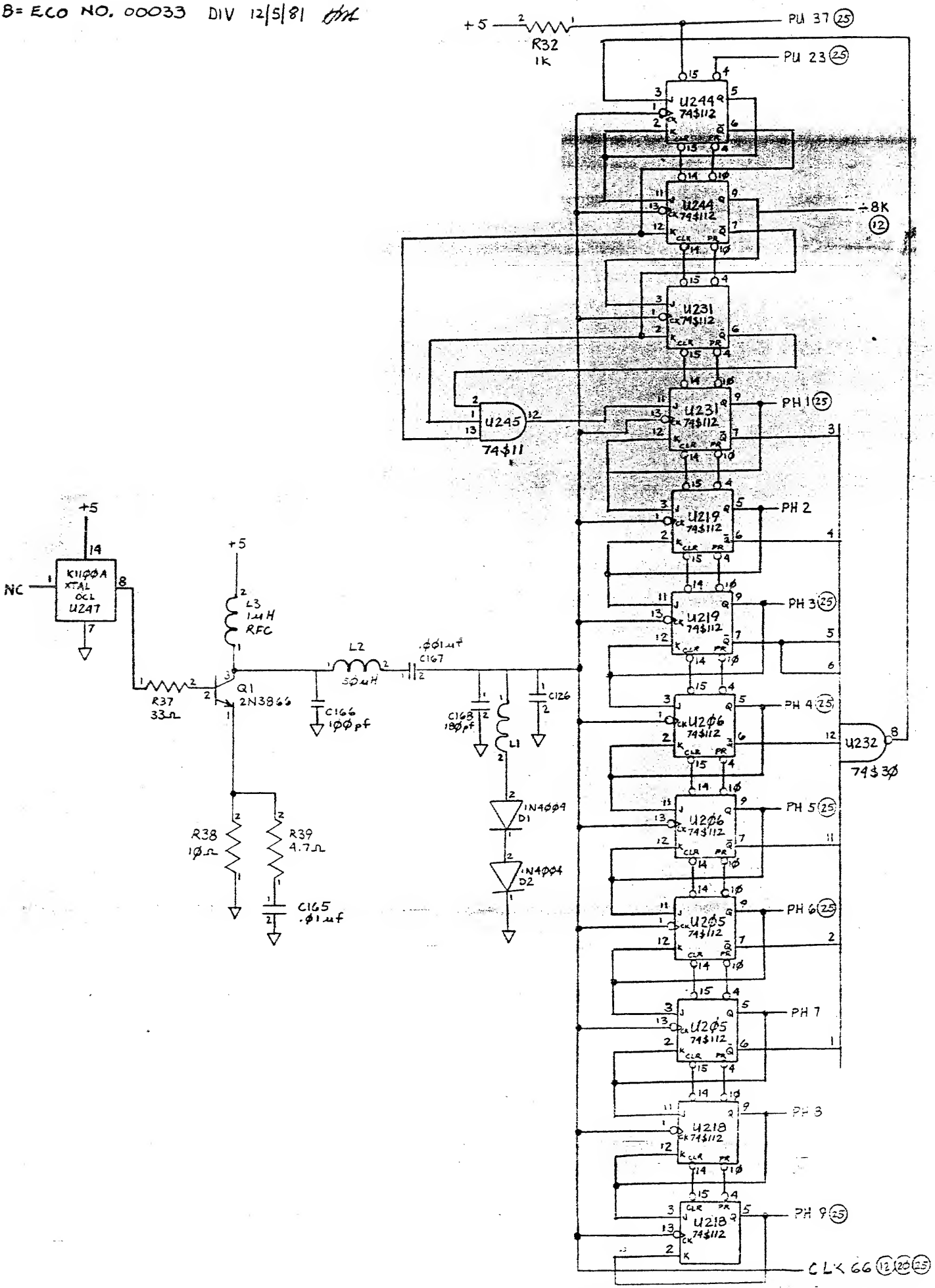

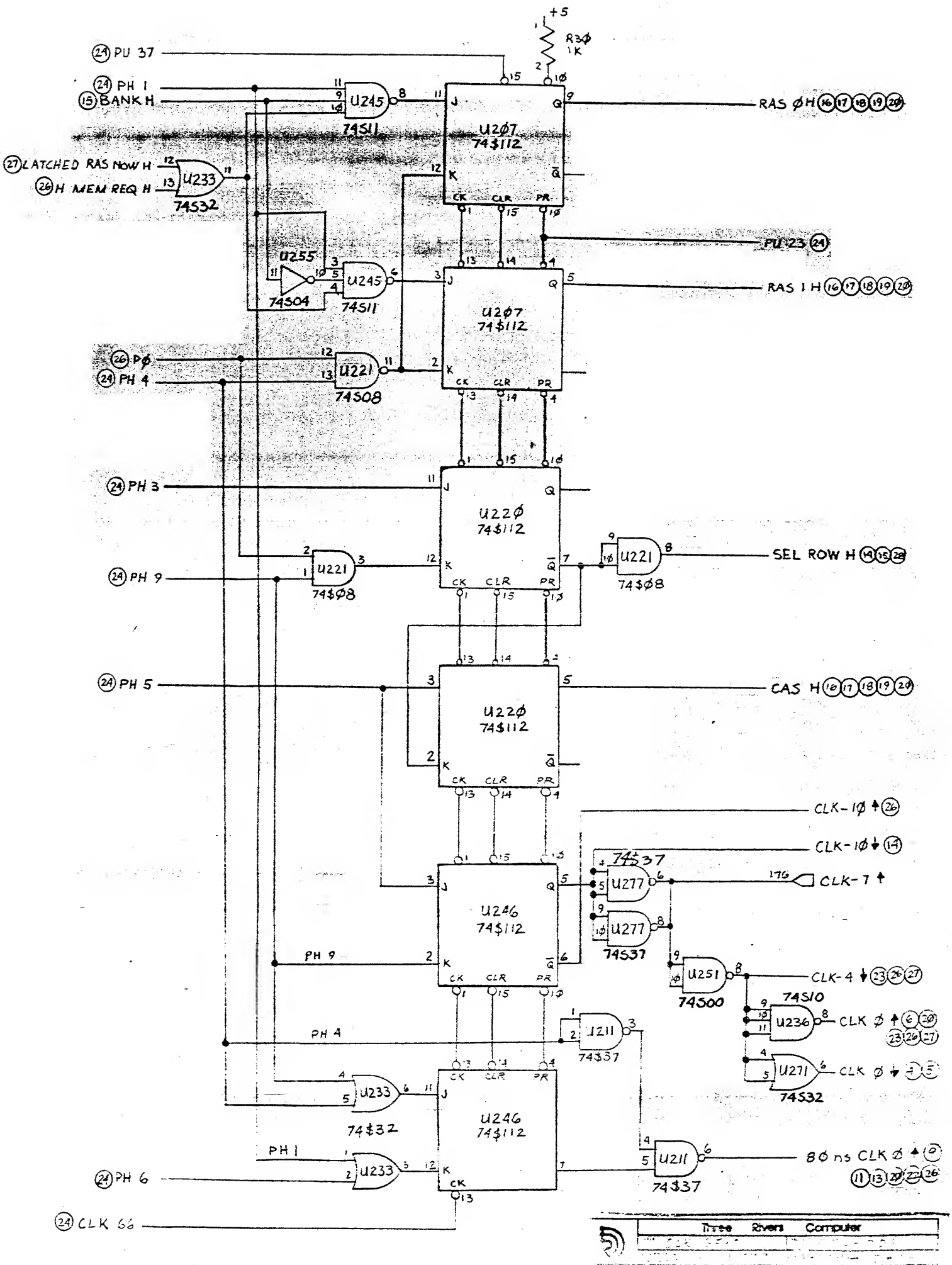
+5
R3Ø 1K
(24) PU 37
(24) PH 1
(15) BANK H
U245
74S11
U2Ø7 74$112
RAS ØH (16)(17)(18)(19)(20)
(27) LATCHED RAS NOW H
(26) H MEM REQ H
U233
74S32
PU 23 (24)
U255
74S04
U245
74S11
U2Ø7 74$112
RAS 1 H (16)(17)(18)(19)(20)
(26) PØ
(24) PH 4
U221
74S08
(24) PH 3
U22Ø 74$112
(24) PH 9
U221
74$Ø8
U221
74$Ø8
SEL ROW H (14)(15)(28)
(24) PH 5
U22Ø 74$112
CAS H (16)(17)(18)(19)(20)
U22Ø 74$112
CLK-1Ø ↑ (26)
CLK-1Ø ↓ (14)
74S37
U277
U277
74S37
17Ø
CLK-7 ↑
U246 74$112
PH 9
U251
74S00
CLK-4 ↓ (23)(26)(27)
74S10
U236
CLK Ø ↑ (6)(20) (23)(26)(27)
PH 4
U211
74$37
U271
CLK Ø ↓ (5)
74S32
U233
74$32
U246 74$112
PH 1
(24) PH 6
U233
U211
74$37
8Ø ns CLK Ø ↑ (0) (11)(13)(21)(22)(26)
(24) CLK 66
Three Rivers Computer

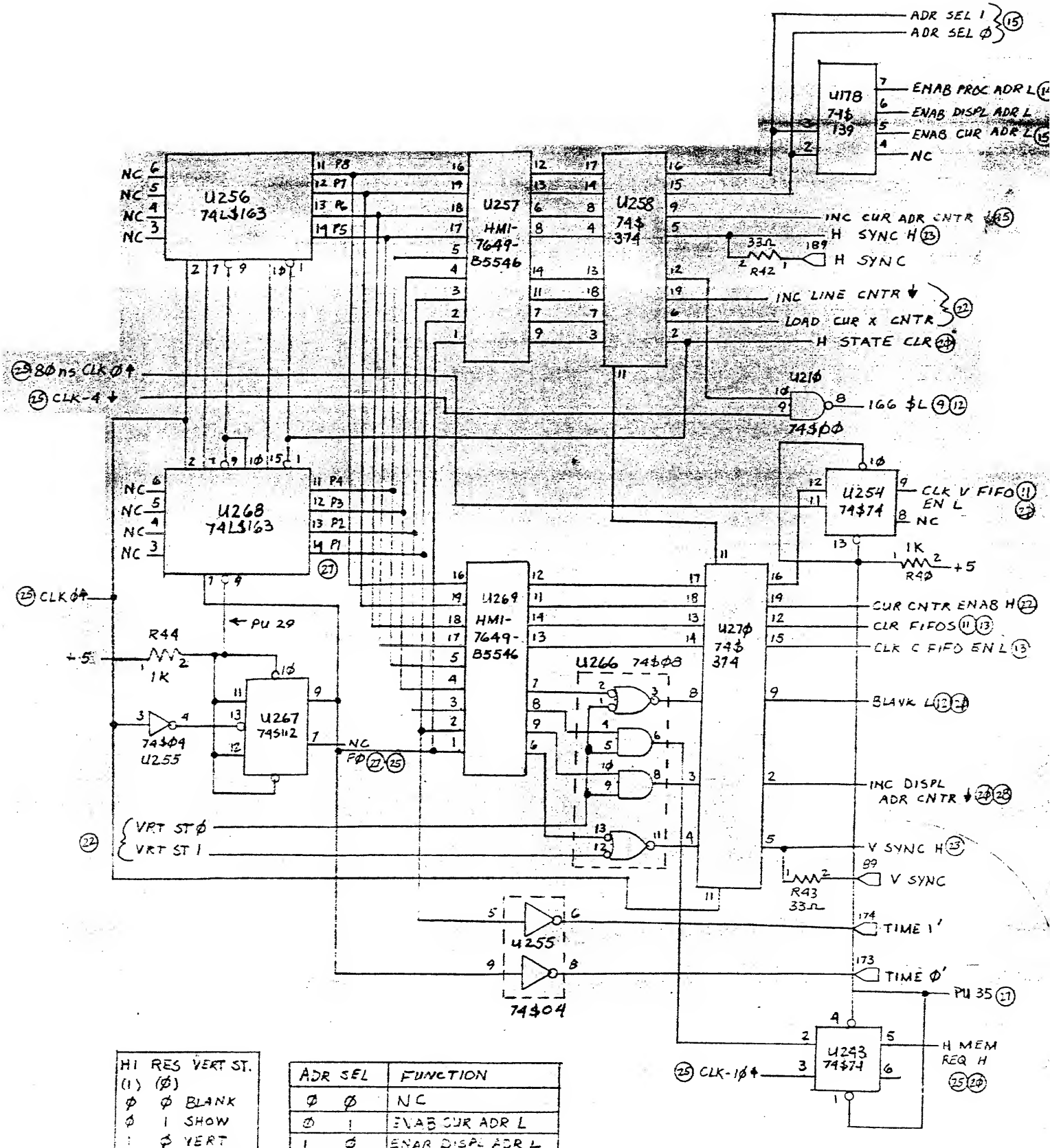

HI RES VERT ST. (1)	(Ø)	
Ø	Ø	BLANK
Ø	1	SHOW
1	Ø	VERT
1	1	ILLEGAL

ADR SEL		FUNCTION
Ø	Ø	NC
Ø	1	ENAB CUR ADR L
1	Ø	ENAB DISPL ADR L
1	1	ENAB PROC ADR L

Three Rivers Computer

HORIZONTAL STATE

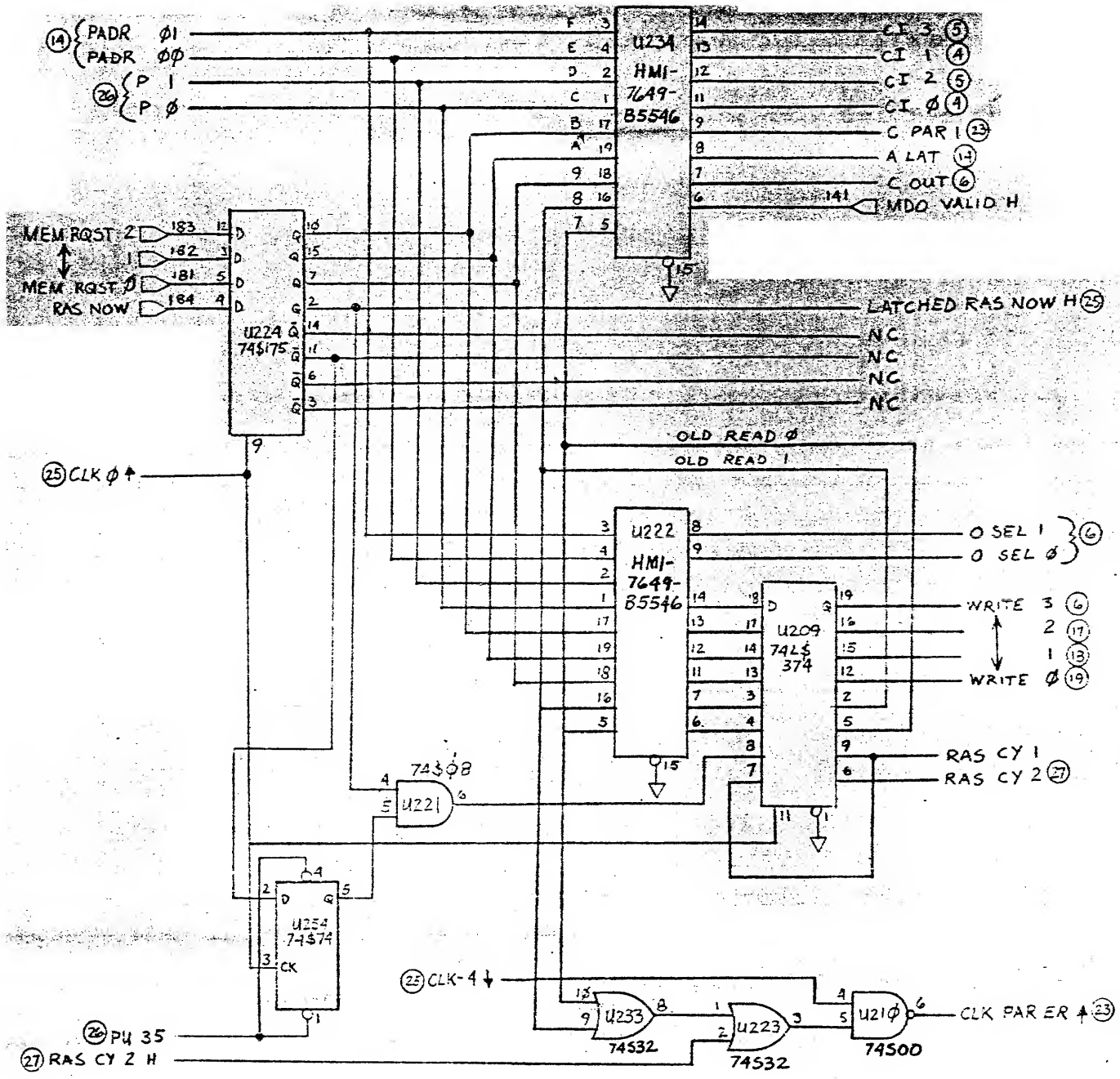

Three Rivers Computer	
MEMORY	

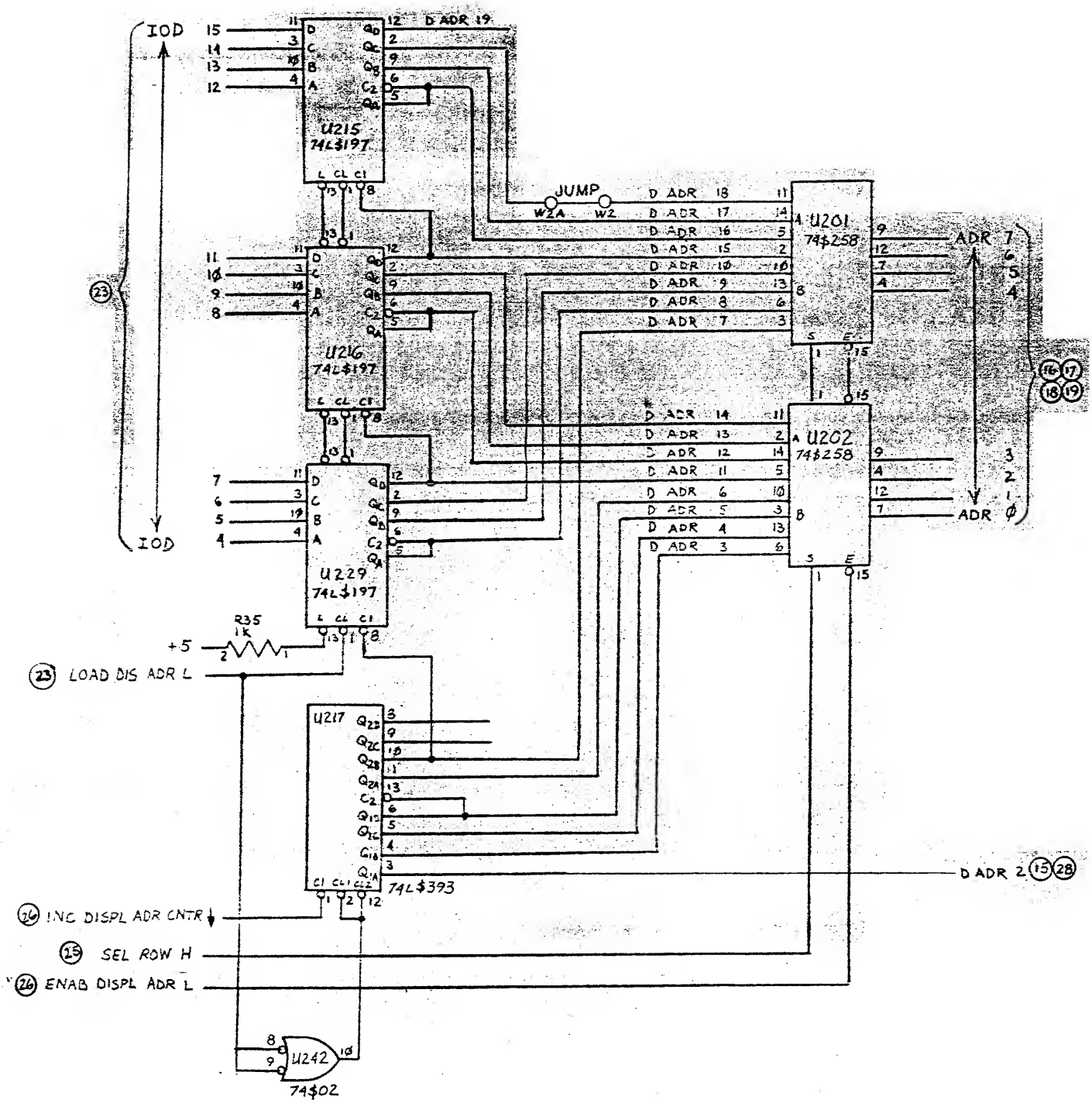

Three Rivers Computer